CHAPTER 2
LENS AND MIRROR CALCULATIONS

2.1 *Introduction*

The equation that relates object distance p, image distance q and focal length f is

$$\frac{1}{p} + \frac{1}{q} = \frac{1}{f}. \qquad 2.1.1$$

Or is it? Should that not be a minus sign on the left hand side? Or should it be a plus sign for mirrors and minus for lenses? ("**M**ore for a **M**irror; **L**ess for a **L**ens."?)

As all who have ever tried lens and mirror calculations know, the biggest difficulty we have to face is that of the dreaded *sign conventions*. It seems that no two professors or teachers or books use the same convention. No sooner have we mastered one than we encounter a professor who insists upon another. Each professor thinks that his is far superior to anyone else's, or is even seemingly unaware that there could be any convention other than his own. We rapidly become discouraged. Indeed, when we try to use equation 2.1.1 there is just one chance in eight that we choose the correct sign for all three symbols. In fact the situation is even worse than that. You might choose the signs correctly for all the symbols and get the right answer, –15 cm, according to your own convention, yet your professor, who uses a different convention, marks it wrong. You might be perfectly clear in your own mind that, since the image is a virtual image, the answer must be minus fifteen. But your professor may interpret the minus sign as meaning that the image is to the left of the lens, or on the opposite side of the lens from the object, or is inverted, and he consequently marks it wrong.

Truly, of course, an answer "–15 cm" *means nothing* unless we are *all* <u>*certain*</u> as to exactly what it meant by the minus sign. I therefore suggest that you do not leave the "answer" is this ambiguous form. If you are asked where the image is and what is its magnification, be very explicit and make it clear, in <u>*words*</u> (not just by plus or minus signs) whether the image

1. is on the same side of the lens as the object is, or on the opposite side;
2. is real or virtual;
3. is erect or inverted;
4. is magnified or diminished.

In this chapter I shall, needless to say, introduce my own sign convention, and needless to say my own convention is vastly superior to anyone else's and quite different from any that you may already be used to or that your own teacher uses, or that you have ever seen in any book.. Worse, I am not going to make use of equation 2.1.1 at all. Instead, I am going to use a technique referred to as the *convergence method.* At first, you are not

going to like it at all, and you may give up impatiently after just a few minutes. I hope, however, that you will persist. Let us look, for example, at the following problem:

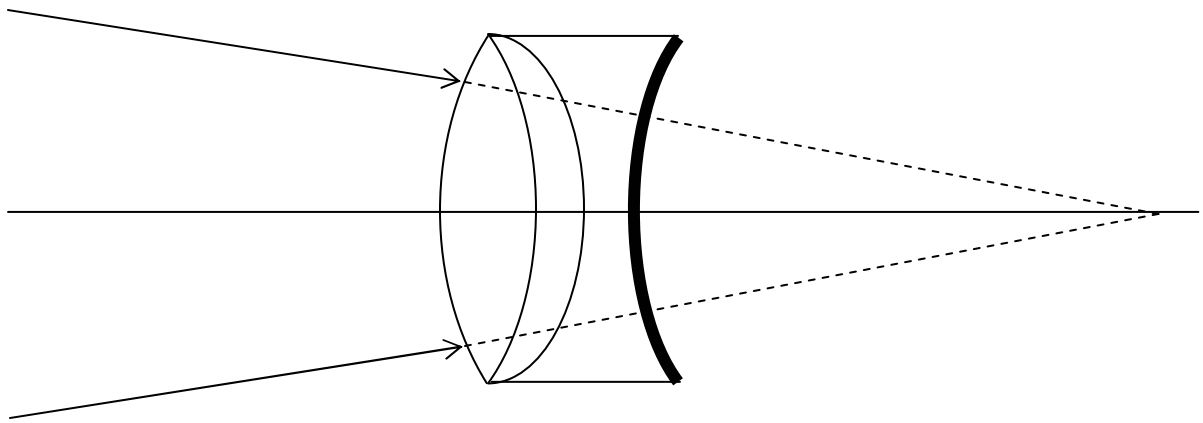

FIGURE II.1

The three lenses all have different refractive indices, all radii of curvature are different, the whole thing is immersed in water, the last surface is a mirror, and the object is a virtual object. Perhaps you are asked to find the image. Or you may be told where the image is and asked to find one of the radii of curvature, or one of the refractive indices. At present, this looks like a hopelessly difficult problem to be avoided before all others in an examination. There is scarcely any chance of getting the right answer.

However, I now assert that, if you take a few minutes to understand the convergence method, you will be limited in your ability to solve problems like these, correctly, *solely by the speed at which you can write.* As soon as you see the problem you will immediately and confidently know how to do it. You just have to make sure that you know where to find the $1/x$ button on your calculator.

2.2 *Limitations*

Before describing the convergence method, I would say a few words about image formation – words that are equally valid whether you choose to use the convergence method or to stick to conventional equations such as equation 2.1.1.

We are assuming that a lens or mirror will form a point image of a point object, and that a parallel beam entering a lens will come to a point focus. You are probably aware – even if unfamiliar with all the fine details – that this is not exactly so, and you will be aware that if the diameter of a lens or mirror is comparable to its focal length or to the object or image distance, light will not come to a focus at a point, but the image will suffer from *spherical aberration*. Also, if the angular size of the object or image is large, so that light enters or leaves a lens or mirror at a large angle, additional aberrations such as *coma* and *astigmatism* appear. (It is not always realised that both spherical aberration and

astigmatism also occur with refraction at a *plane* interface; neither are phenomena associated solely with curved refractive interfaces or curved reflective surfaces.) Although angles in this chapter are assumed to be small, I shall rarely draw them as small, because to do so would make for very cramped drawings.

In this chapter, I am going to ignore lens and mirror aberrations. I may possibly prepare a separate chapter on lens and mirror aberrations sometime, but that is not the topic of the present chapter. Thus, in this chapter, I am going to assume that all angles are *small.* How small depends on how large an aberration we are prepared to tolerate. Generally it means that I shall be satisfied with the approximation $\sin x = \tan x = x$. This approximation is known as the *paraxial* approximation. It means that none of the light rays make very large angles with the axis of the optical system.

You will also be aware that the refractive index varies with wavelength, and as a result lenses are affected by *chromatic aberration.* This, too, I shall ignore, except for a brief foray in section 2.9, and if I say that the refractive index of a lens (or rather of the glass of which it is made) is 1.5, I am referring to a particular wavelength or colour.

Initially, I shall also make the approximation that lenses are *thin*. That is to say, I assume that I can neglect the thickness of the lens compared with its focal length or with the object or image distance. However, in section 2.10, I shall relax this restriction, and I shall deal with "thick" lenses.

2.3 *Real and Virtual*

Most people have no trouble understanding what a real object is or the distinction between a real image and a virtual image. A virtual *object*, however, may take one by surprise – so let's look at all of them here.

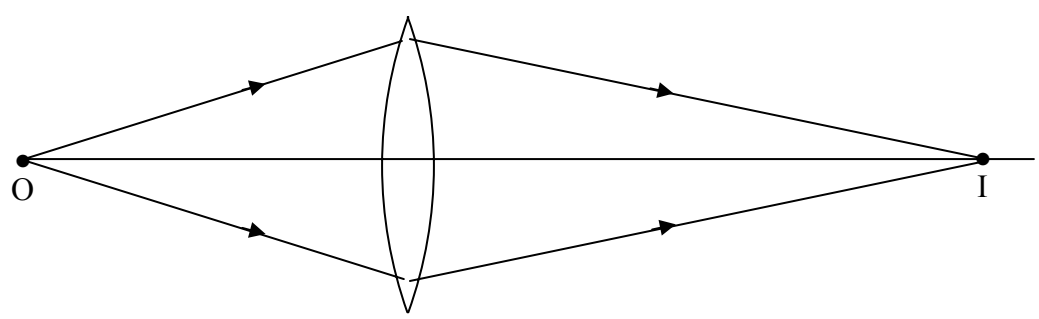

FIGURE II.2

Figure II.2 shows a lens forming a real image of a real object, and I think it requires little explanation. Light diverges from a real object and it converges to a real image. Real photons of light depart from a real object, and real photons of light arrive at a real image.

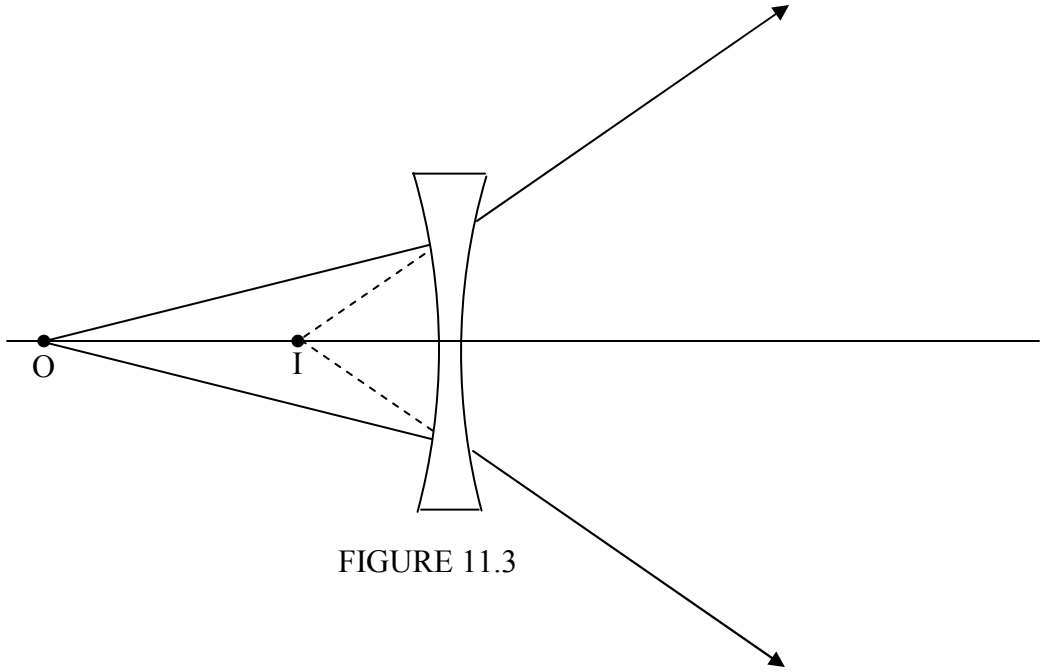

FIGURE 11.3

Figure II.3 shows a lens forming a virtual image of a real object. As before, light diverges from the real object, but no light converges to a real image. After refraction through the lens, the light is diverging from a point where the photons have never visited. The light is diverging from a virtual image.

Whereas you can project a real image on to a piece of card or a photographic film, you cannot do this with a virtual image. The reason that you can *see* a real image with your eye is that the additional optics of your eye bends the diverging light from the virtual image and makes it converge on to a real image on your retina.

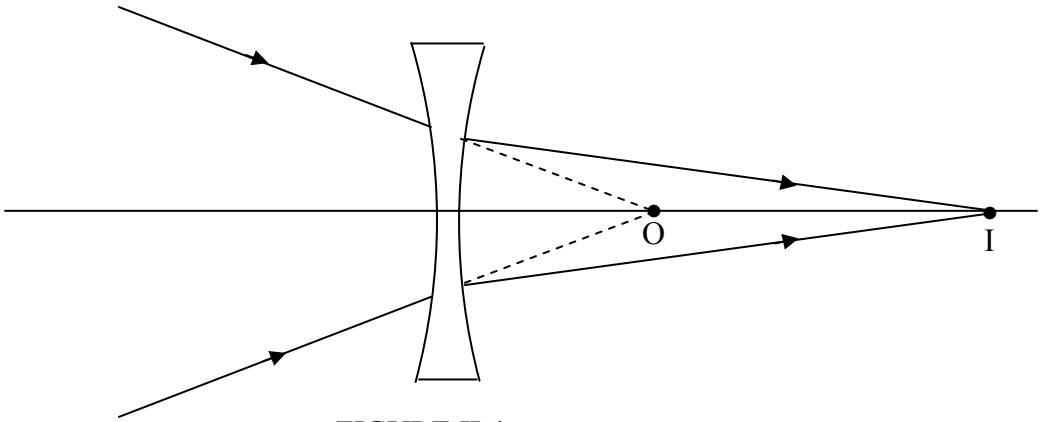

FIGURE II.4

Figure II.4 illustrates what is meant by a virtual object. Light is coming from the left – perhaps from a big lens beyond the left hand edge of the paper (or your computer screen). It is converging to the point O, and, if the concave lens had not got in the way, it would have formed a real image at O. However, as far as the concave lens of figure II.3 is concerned, the point O to which the light was converging before it reached the lens is a *virtual object.* No photons reach that point. The lens bends the light, which eventually comes to a focus at a real image, I.

You will see that light *converges to a real image or to a virtual object*, and light *diverges from a real object or from a virtual image.*

This is not a sign "convention"; it is just a statement of fact, or an explanation of what are meant by "real object", virtual object", "real image" or "virtual image".

2.4 *Convergence*

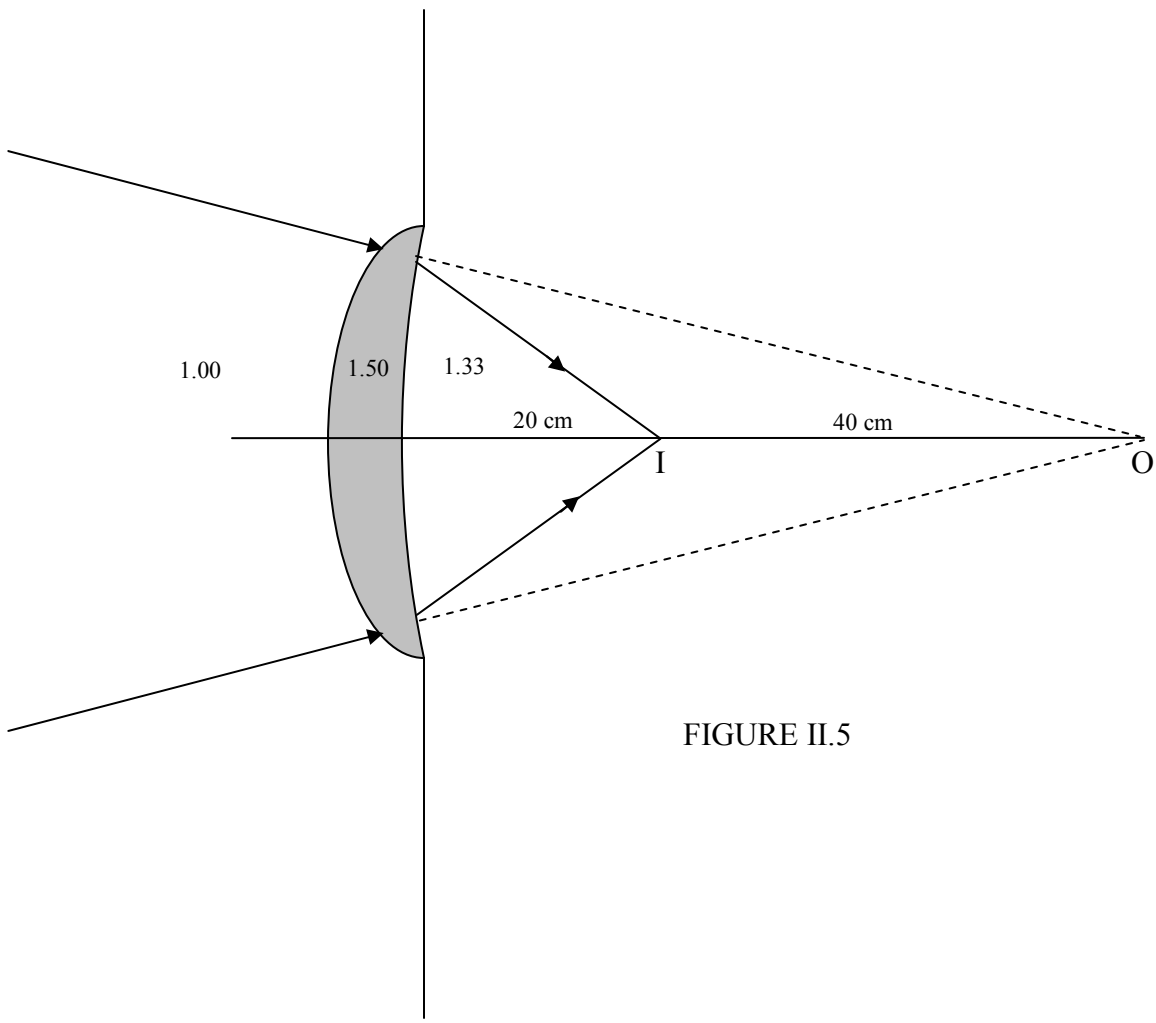

FIGURE II.5

Figure II.5 shows a lens made of glass of refractive index 1.50. To the left of the lens is air (refractive index 1.00). To the right of the lens is water (refractive index 1.33). A converging beam of light is incident upon the lens directed toward a virtual object O that is 60 cm from the lens. After refraction through the lens, the light converges to a real image I that is 20 cm from the lens. I am not at this stage going to ask you to calculate the radii of curvature of the lens. (You can't – you need one more item of information.) I just want to use this diagram to define what I mean by *convergence.*

The convergence of the light at the moment when it is incident upon the lens is called the *initial convergence* C_1, and it is defined as follows:

$$\textit{Initial convergence} = \frac{\textit{Refractive index}}{\textit{Object distance}}. \qquad 2.4.1$$

The convergence of the light at the moment when it leaves the lens is called the *final convergence* C_2, and it is defined as follows:

$$\textit{Final convergence} = \frac{\textit{Refractive index}}{\textit{Image distance}}. \qquad 2.4.2$$

Sign convention: <u>Converging</u> light has <u>positive</u> convergence;

<u>Diverging</u> light has <u>negative</u> convergence.

In our example: Initial convergence = $+\frac{1.00}{60} = +0.01667\ \text{cm}^{-1}$.

Final convergence = $+\frac{1.33}{20} = +0.06650\ \text{cm}^{-1}$.

Notice that, before the light enters the lens, it is in a medium of refractive index 1.00. Thus the relevant refractive index is 1.00, even though the virtual object is in the water.

2.5 *Power*

It will be evident that the function of a lens is to *change the convergence* of a beam of light. Indeed the difference between the initial and final convergence is called the *power* P of the lens, or of a refracting interface, or of a reflecting mirror. Thus, here is the only equation you need to know in geometric optics. (Well, maybe not quite true.)

Final convergence = initial convergence plus power,

or

$$C_2 = C_1 + P. \qquad 2.5.1$$

In order to solve a question in geometric optics, then, it is necessary to know the *power* of the optical system.

There are three basic optical elements for which we need to know the power, namely a lens, a refracting interface, and a reflecting surface.

I am now going to *tell you,* without proof, what the powers of these elements are. I shall supply proofs later. For the moment, I want us to become used to using the formulas, accurately and at speed.

1. The power of a lens of focal length f is

$$P = \frac{1}{f} \cdot \qquad 2.5.2$$

Note that by the focal length of a lens I mean the focal length of the lens when it is in a vacuum, or, what amounts to almost the same thing, when it is in air.

Sign convention: The focal length of a <u>converging</u> lens is <u>positive</u>;

The focal length of a <u>diverging</u> lens is <u>negative</u>.

2. The power of a refracting interface, of radius of curvature r, separating media of refractive indices n_1 and n_2, is

$$P = \frac{n_2 - n_1}{r} \cdot \qquad 2.5.3$$

Sign convention:

The radius of curvature of a <u>convex</u> surface or interface is <u>positive</u>;

The radius of curvature of a <u>concave</u> surface or interface is <u>negative</u>.

3. The power of a reflecting spherical surface of radius of curvature r immersed in a medium of refractive index n is

$$P = -\frac{2n}{r} \cdot \qquad 2.5.4$$

Power can be expressed in cm^{-1} or in m^{-1}. In this connection a m^{-1} is sometimes called a <u>diopter.</u> Thus a lens of focal length 5 cm has a power of 20 diopters.

2.6 *Magnification*

Magnification is, of course, defined as

$$\text{Magnification} = \frac{\textit{Image height}}{\textit{Object height}}. \qquad 2.6.1$$

Strictly speaking, this is the *linear transverse (or lateral) magnification*. There are other "sorts" of magnification, such as angular magnification and longitudinal magnification, but we shan't deal with these just yet, and the term "magnification" will be assumed to mean the lateral linear magnification.

I now *assert without proof*, (but I shall prove later) that the magnification can be calculated from

$$\text{Magnification} = \frac{\textit{Initial convergence}}{\textit{Final convergence}} = \frac{C_1}{C_2}. \qquad 2.6.2$$

Sign convention:

If the magnification is <u>positive</u>, the image is <u>erect</u>;

If the magnification is <u>negative</u>, the image is <u>inverted</u>.

2.7 *Examples*

1. A real object is 15 cm from a converging lens of focal length 25 cm. Where is the image? Describe it.

Light diverges from a real object, so the initial convergence is negative. $C_1 = -1/15$ cm^{-1}. The power of the converging lens is $P = +1/25$ cm^{-1}. The final convergence is

$$C_2 = -\frac{1}{15} + \frac{1}{25} = -\frac{2}{75}\ \text{cm}^{-1}.$$

The image is <u>37.5 cm</u> from the lens. Light is diverging after it leaves the lens. The image is on the <u>same</u> side of the lens as the object is. It is a <u>virtual</u> image. The magnification is $C_1/C_2 = +2.5$. The image is <u>erect</u> and <u>magnified</u> in size.

2. The faces of a biconvex lens have radii of curvature 20 cm and 30 cm, and the refractive index of the glass is 1.5. What is the focal length of the lens?

Refer to figure II.6.

The initial convergence is zero. The final convergence will be $1/f$. The power of the first surface is $\frac{1.5-1.0}{+20}$ cm^{-1}. The power of the second surface is $\frac{1.0-1.5}{-30}$ cm^{-1}. *Note that the radius of curvature of the second surface, when encountered by the light, is* <u>*negative*</u>.

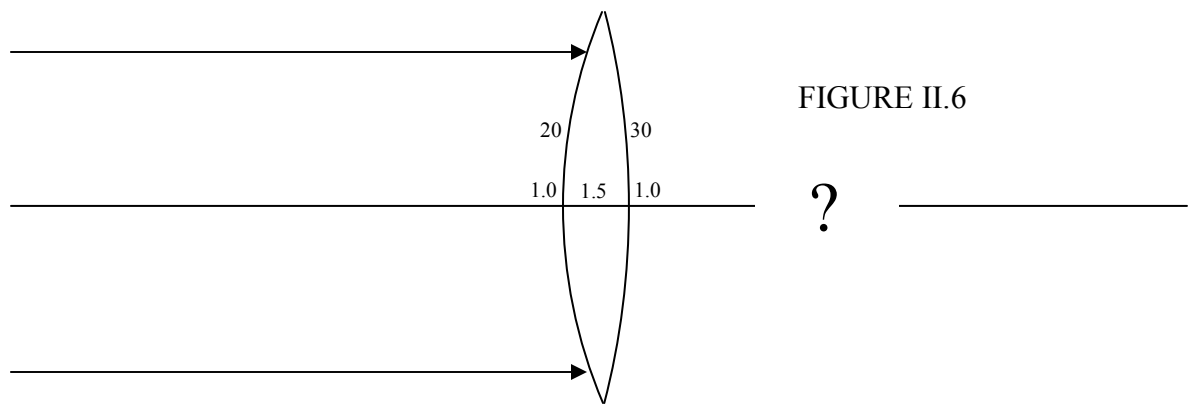

FIGURE II.6

Therefore: $$\frac{1}{f} = \frac{1.5-1.0}{+20} + \frac{1.0-1.5}{-30}.$$

$\therefore$ $\underline{f = 24 \text{ cm.}}$

The lens is a converging lens.

3. What is the focal length of this lens, in which I have marked the radii of curvature in cm and the refractive indices?

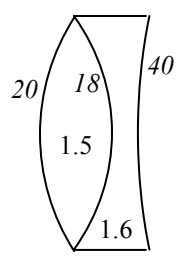

The power, which is the reciprocal of the focal length, is the sum of the powers of the three interfaces:

$$\frac{1}{f} = \frac{1.5-1.0}{20} + \frac{1.6-1.5}{-18} + \frac{1.0-1.6}{-40} = +0.03\dot{4} \text{ cm}^{-1}. \qquad \therefore \underline{f = +29.0 \text{ cm.}}$$

4. Let's now go straight to the impossibly difficult problem of section 2.1

FIGURE II.7

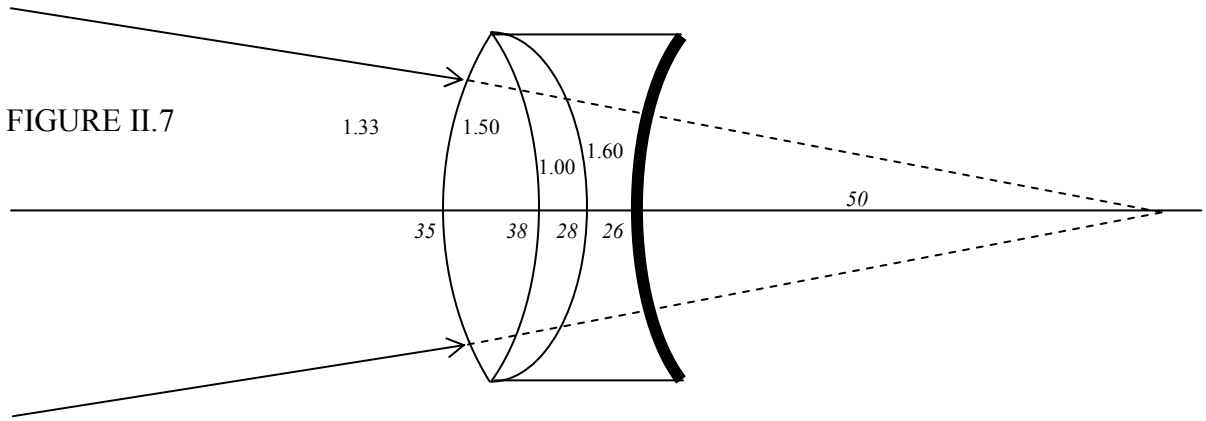

I have marked in the several refractive indices, and, in italics, the radii of curvature and the distance of the virtual object, in cm. Remember that, notwithstanding the drawing, we are assuming that all lenses are *thin* – that is to say that their thicknesses are negligible compared with other distances.

The system is immersed in water, so the initial convergence is +1.33/50. We are going to find the final convergence. To the initial convergence we are going to add, successively, the powers of the first three refracting interfaces, then the reflecting surface, and then the three refracting surfaces again on the way out. Watch for the refractive indices and the signs of the radii of curvature in each term. The calculation goes like this – as fast as you can write:

Final convergence =

$$+\frac{1.33}{50} + \frac{1.50-1.33}{35} + \frac{1.00-1.50}{-38} + \frac{1.60-1.00}{-28} + \frac{-2\times 1.60}{+26}$$
$$+\frac{1.00-1.60}{+28} + \frac{1.50-1.00}{+38} + \frac{1.33-1.50}{-35} \quad \text{cm}^{-1}.$$

You can almost double the speed when you realize that the power of a refracting interface is the same whichever way you go (from left to right or from right to left).

We obtain: Final convergence = –0.103304 cm^{-1}.

Final convergence is refractive index divided by image distance, so the distance of the image from the lens (remember that it's a thin lens, so don't ask which part of the lens) is 1.33 ÷ 0.103304, or <u>12.9 cm.</u>

The light is diverging after it leaves the lens. It is on the <u>same</u> side of the lens as the virtual object is. It is a *virtual* image. The magnification is initial convergence ÷ final convergence and is therefore <u>–0.257</u>. The image is <u>inverted</u> and <u>diminished</u> in size.

This example perhaps shows the greatest power (pun not intended) of the convergence method – i.e. in dealing with many optical elements one after the other. The is no need for convoluted arguments such as "the real image formed by the first element acts as a virtual object for the second element, and then...".

5. Three observations are performed on a lens in order to determine the radii of curvature of its two surfaces and the refractive index of its glass.

i.) A real object is placed 40 cm to the left of the lens, and a real image is formed 300 cm to the right.

The question doesn't tell us what sort of a lens it is. Let's suppose that it is biconvex; we'll soon find out if it isn't.

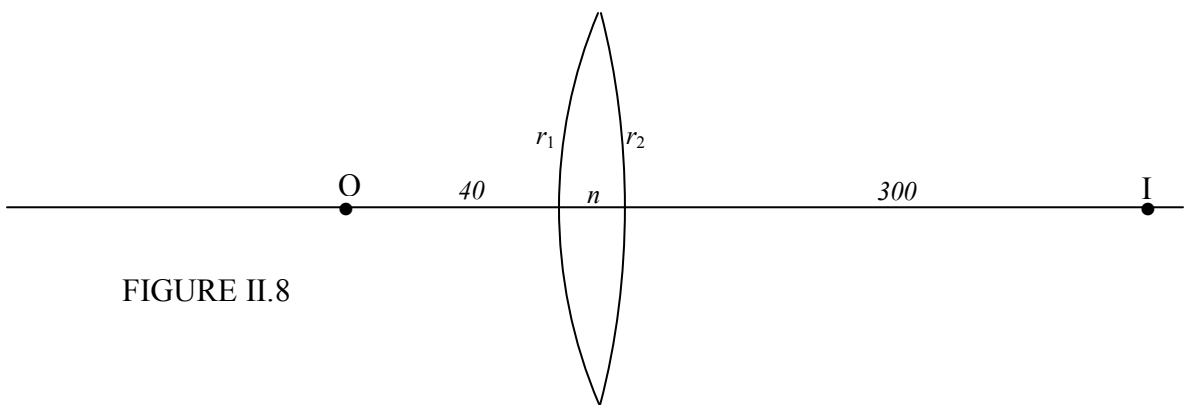

FIGURE II.8

The first experiment tells us:

$$\frac{1}{+300} = -\frac{1}{40} + \frac{n-1}{r_1} + \frac{1-n}{-r_2}.$$

That is:

$$(n-1)\left(\frac{1}{r_1} + \frac{1}{r_2}\right) = 0.028\dot{3}\ \text{cm}^{-1}. \qquad 2.7.1$$

ii.) The lens is floated on the surface of mercury, r_1-side up. A real object is placed 60 cm above it, and a real image is formed 50 cm above it.

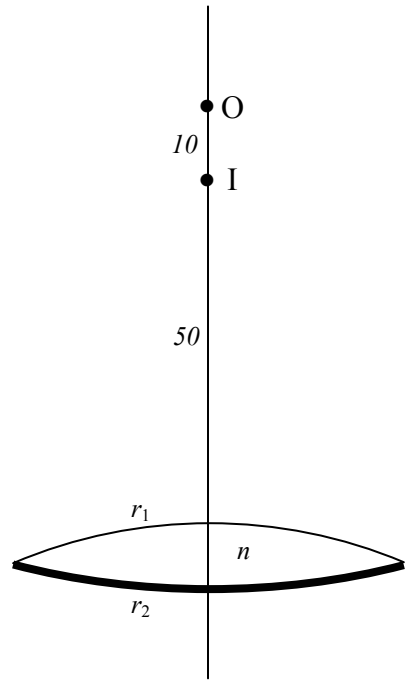

FIGURE II.9

The second experiment tells us:

$$+\frac{1}{50} = -\frac{1}{60} + \frac{n-1}{r_1} + \frac{-2n}{-r_2} + \frac{1-n}{-r_1}.$$

That is:

$$\frac{n-1}{r_1} + \frac{n}{r_2} = 0.018\dot{3}. \qquad 2.7.2$$

ii.) The lens is floated on the surface of mercury, r_2-side up. A real object is placed 60 cm above it, and a real image is formed 6 cm above it. (Figure II.10.)

It is necessary to remind ourselves that, the drawing notwithstanding, the lens is thin and all angles are small.

The third experiment tells us:

$$+\frac{1}{6} = -\frac{1}{60} + \frac{n-1}{r_2} + \frac{-2n}{-r_1} + \frac{1-n}{-r_2}.$$

That is:

$$\frac{n-1}{r_2} + \frac{n}{r_1} = 0.091\dot{6}. \qquad 2.7.3$$

Thus we have three nonlinear equations to solve for the three unknowns. Three nonlinear equations have been known to make grown men tremble in their shoes, but fortunately these three are trivial to solve. It might help to let $s = 1/r_1$ and $t = r_2$, when the equations become

FIGURE II.10

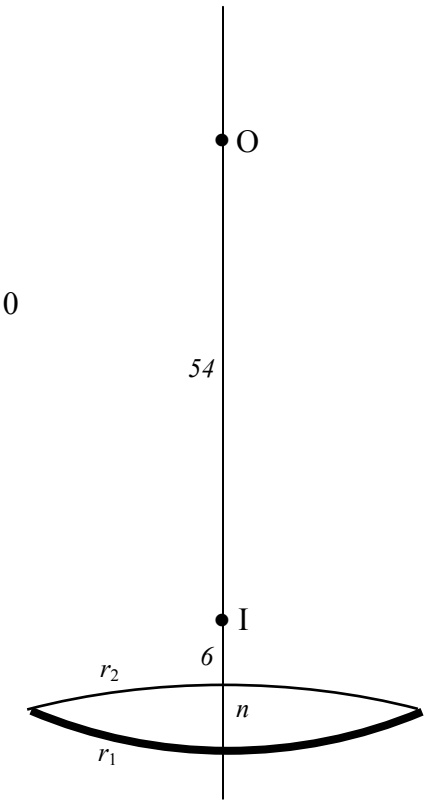

$$(n-1)(s+t) = 0.028\dot{3}. \qquad 2.7.4$$

$$(n-1)s + nt = 0.018\dot{3}. \qquad 2.7.5$$

$$(n-1)t + ns = 0.091\dot{6}. \qquad 2.7.6$$

One soon arrives at: $\underline{n = 1.53, \quad r_1 = 15.8 \text{ cm}, \quad r_2 = -100.0 \text{ cm.}}$

Our assumption that the lens is biconvex was wrong. The second surface is the other way round, and the lens is a meniscus converging lens.

Exercise. A converging lens forms a real image of a real object. Show that the least distance between real object and real image is $4f$, and that the magnification is then -1. Remember this when you are trying to show slides in your living room, and you can't seem to focus the projector on the screen.

Exercise. A screen is at a fixed distance from a real object. A converging lens is placed between object and screen so as to throw a magnified inverted real image on the screen. The lens is then moved towards the screen, and, after it has moved a distance d, it is seen

to throw another real, inverted image on the screen, but this time diminished. Show that, if the distance between object and screen is w, the focal length of the lens is

$$f = \frac{w^2 - d^2}{4w}.$$

Exercise. A beetle on the axis of a converging lens and at a distance greater than $2f$ from it runs towards the lens at a speed υ. Show that its real image moves at a speed $m^2\upsilon$, where m is the transverse magnification. In which direction does the image move – towards or away from the lens?

Exercise. Two media of refractive indices n_1 and n_2 are separated by a spherical refractive interface or by a lens – it doesn't matter which. An object of length Δp lies along the axis in the n_1 side. As a result, the length of the image is Δq. The ratio $\Delta q/\Delta p$ is called the *longitudinal magnification.* Show that

$$m_{\text{long}} = \frac{n_2}{n_1} m_{\text{lat}}^2 .$$

2.8 *Derivation of the Powers*

Up to this point I have defined what is meant by convergence, and I have defined power as the difference between the final and initial convergences. I *asserted without proof* formulas for the powers of a lens, a refracting interface, and a mirror. It is now time to derive them. Remember that in this chapter I am dealing with small angles only (indeed if angles are not small, a point object will not result in a point image) and consequently I am going to assume that any angle is equal to its tangent or to its sine, and I am going to write Snell's law in the form

$$n_1 \sin\theta_1 = n_2 \sin\theta_2 \quad or \quad n_1 \tan\theta_1 = n_2 \tan\theta_2 \quad or \quad n_1\theta_1 = n_2\theta_2$$

as the spirit moves me and at my convenience.

2.8.1 *Power of a Lens*

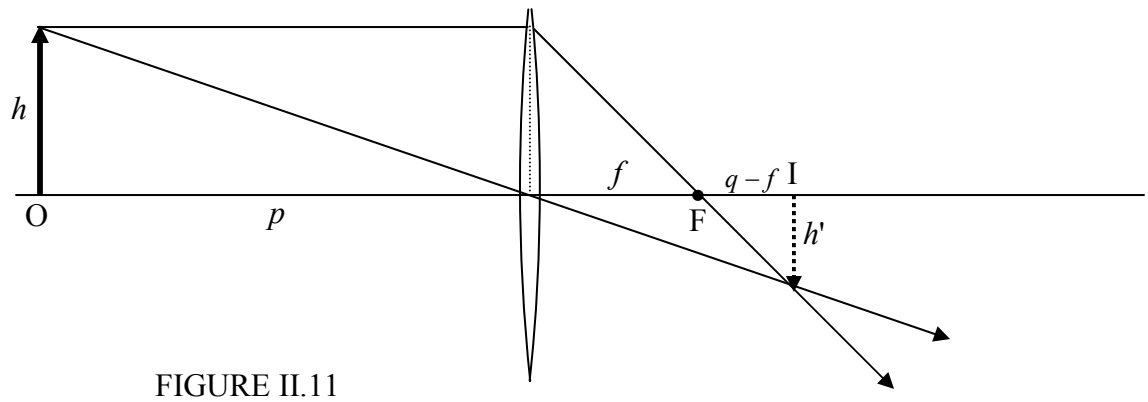

FIGURE II.11

I have drawn two rays emanating from the tip of the object. One is parallel to the axis; after refraction it passes through the focus. The other goes through the centre ("pole") of the lens; since the lens is "thin", this ray is neither deviated not displaced. The two rays cross at the tip of the image. From two obvious pair of similar triangles, we see that

$$\frac{h'}{h} = \frac{q}{p} = \frac{q-f}{f}. \qquad 2.8.1$$

From this we immediately obtain

$$\frac{1}{q} = -\frac{1}{p} + \frac{1}{f}. \qquad 2.8.2$$

Since the initial and final convergences are $-1/p$ and $1/q$, it follows that the power is $1/f$. You might want to draw the cases where the real object is at a distance less than $2f$ from the lens (and hence forms a virtual image) or for a virtual object, or the corresponding situations for a diverging lens. You will reach the same conclusion in each case.

2.8.2 *Power of a Refracting Interface*

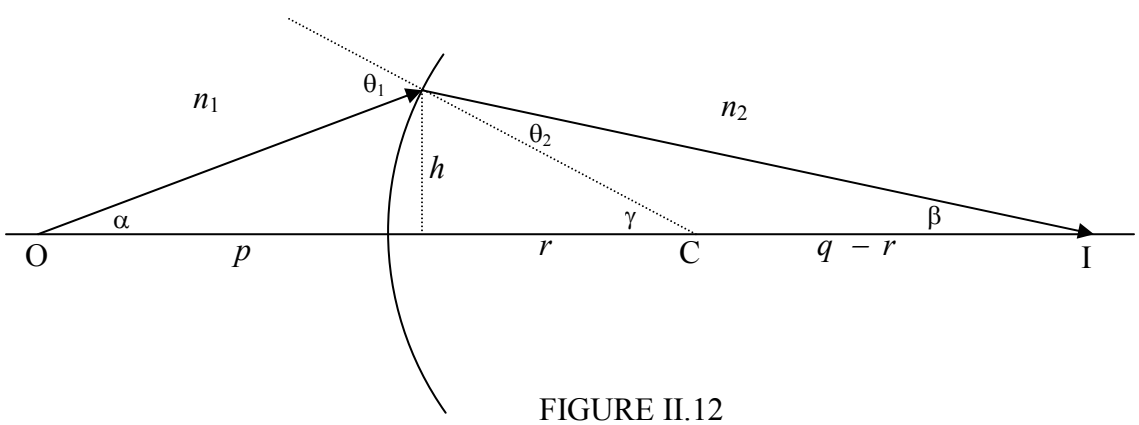

FIGURE II.12

Figure II.12 shows a refracting interface of radius of curvature r separating media of indices n_1 and n_2. I show a real object at O, a real image at I and the centre of curvature at C. Remember that angles are small and the "lens" is thin. We see that $h = \alpha p = \beta q = \gamma r$. By Euclid, $\theta_1 = \alpha + \gamma$ and $\theta_2 = \gamma - \beta$, and by Snell, $n_1 \theta_1 = n_2 \theta_2$. From these, we obtain

$$\frac{n_2}{q} = -\frac{n_1}{p} + \frac{n_2 - n_1}{r}. \qquad 2.8.3$$

Thus the power is $\frac{n_2 - n_1}{r}$. The reader should try this for other situations (virtual object, virtual image, concave interface, and so on) to see that you always get the same result.

2.8.3 *Power of a Mirror*

In figure II.13 shows a reflecting surface of radius of curvature r submerged in a medium of index n. I show a real object at O, a virtual image at I and the centre of curvature at C. We see that $h = \alpha p = \beta q = \gamma r$. By Euclid, $\theta = \alpha + \gamma$ and $2\theta = \alpha + \beta$. Remember again that all angles are supposed to be small (even β!), in spite of the drawing. From these we obtain

$$\frac{1}{q} = \frac{1}{p} + \frac{2}{r}. \qquad 2.8.4$$

On multiplying this by $-n$, we find that the power is $-2n/r$. Again the reader should try this for other situations, such a concave mirror, or a real image, and so on. The same result will always be obtained.

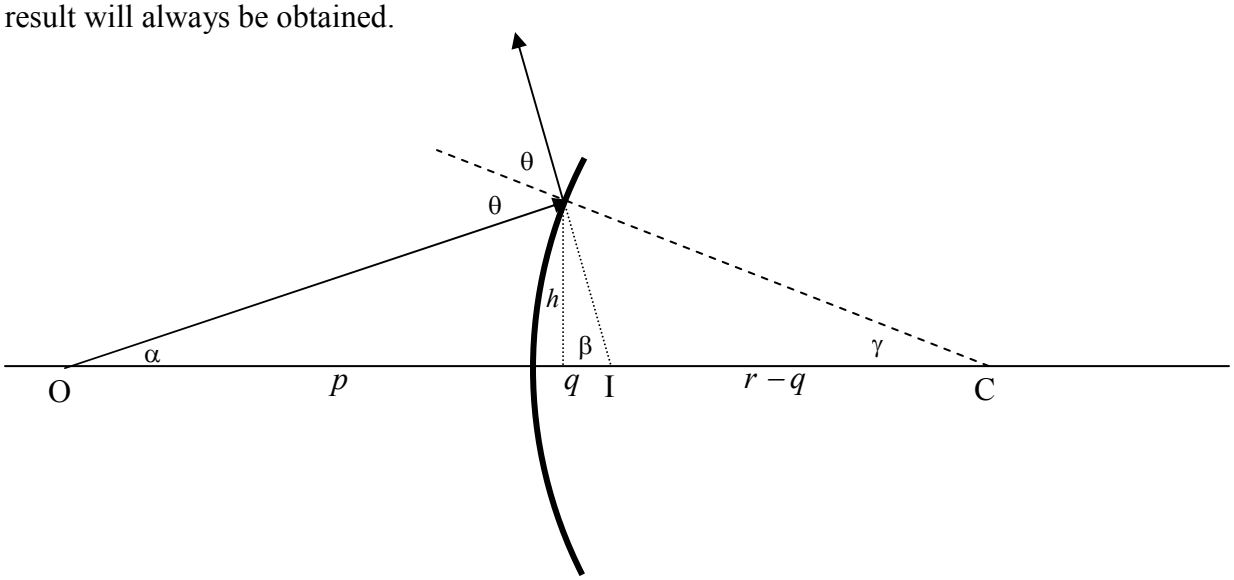

FIGURE 11.13

2.9 *Derivation of Magnification*

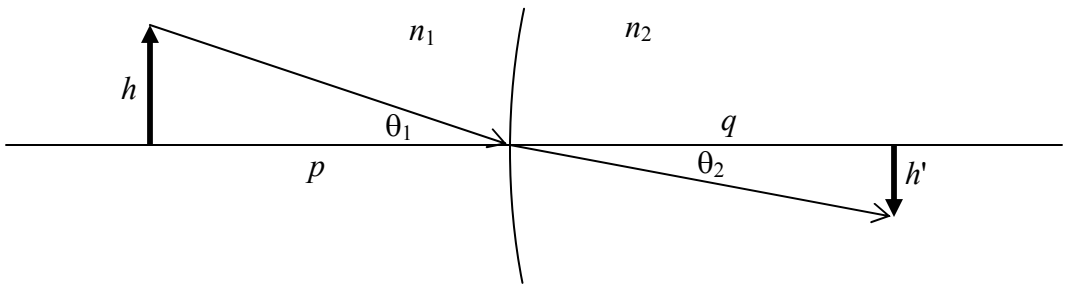

FIGURE II.14

Figure II.14 shows an optical element separating media of indices n_1 and n_2. I have drawn the element as an interface, though it could equally well be a lens (or, if I were to fold the drawing, a mirror). An image of height h' is formed at a distance q of an object of height h at a distance p. Assuming, as ever, that angles are small, we have

$$\text{magnification} = \frac{\theta_2 q}{\theta_1 p}.$$

But Snell's law, for small angles, is $n_1\theta_1 = n_2\theta_2$, and therefore

$$\text{magnification} = \frac{n_1 q}{n_2 p} = \frac{C_1}{C_2}. \qquad 2.9.1$$

2.10 *Designing an Achromatic Doublet*

It is not the intention of this chapter to study lens aberrations. However, the design of an achromatic doublet lens lends itself to the sort of calculation we are doing in this chapter.

A combination of two lenses in contact, a converging lens made of crown glass and a weaker diverging lens made of flint glass, can be designed so that the combination is a converging lens that is almost achromatic. Flint glass is a little denser than crown glass, and has a higher refractive index and a greater dispersive power.

The *dispersive power* ω of glass is usually defined as

$$\omega = \frac{n^{(F)} - n^{(C)}}{n^{(D)} - 1}. \qquad 2.10.1$$

Here C, D and F refer to the wavelengths of the C, D and F Fraunhofer lines in the solar spectrum, which are respectively, Hα (656.3 nm), Na I (589.3 nm), Hβ (486.1 nm), and which may be loosely referred to as "red", "yellow" and "blue". A typical value for a crown glass would be about 0.016, and a typical value for a flint glass would be about 0.028.

An achromatic doublet is typically made of a positive crown glass lens whose power is positive but which decreases with increasing wavelength (i.e. toward the red), cemented to a weaker flint glass lens whose power is negative and also decreases (in magnitude) with increasing wavelength. The sum of the two powers is positive, and varies little with wavelength, going through a shallow minimum. Typically, in designing an achromatic doublet, there will be two requirements to be satisfied: 1. The power or focal length in yellow will be specified, and 2. You would like the power in red to be the same as the power in blue, and to vary little in between.

Consider the doublet illustrated in figure II.15, constructed of a biconvex crown lens and a biconcave flint lens.

FIGURE II.15

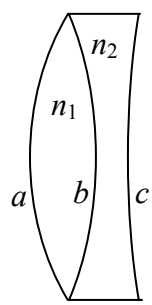

I have indicated the indices and the radii of curvature. The power (reciprocal of the focal length) of the first lens by itself is

$$P_1 = (n_1 - 1)\left(\frac{1}{a} + \frac{1}{b}\right), \qquad 2.10.2$$

and the power of the second lens is

$$P_2 = -(n_2 - 1)\left(\frac{1}{b} + \frac{1}{c}\right). \qquad 2.10.3$$

I shall write these for short, in obvious notation, as

$$P_1 = k_1(n_1 - 1), \qquad P_2 = -k_2(n_2 - 1). \qquad 2.10.4a,b$$

But we need equations like these for each of the three wavelengths, thus:

$$P_1^{(C)} = k_1(n_1^{(C)} - 1), \qquad P_2^{(C)} = -k_2(n_2^{(C)} - 1), \qquad 2.10.5a,b$$

$$P_1^{(D)} = k_1(n_1^{(D)} - 1), \qquad P_2^{(D)} = -k_2(n_2^{(D)} - 1), \qquad 2.10.6a,b$$

$$P_1^{(F)} = k_1(n_1^{(F)} - 1), \qquad P_2^{(F)} = -k_2(n_2^{(F)} - 1). \qquad 2.10.7a,b$$

Now we want to satisfy two conditions. One is that the total power be specified:

$$P_1^{(D)} + P_2^{(D)} = P^{(D)} . \qquad 2.10.8$$

The other is that the total power in the red is to equal the total power in the blue, and I now make use of equations 2.10.5 and 2.10.7:

$$k_1(n_1^{(C)} - 1) - k_2(n_2^{(C)} - 1) = k_1(n_1^{(F)} - 1) - k_2(n_2^{(F)} - 1). \qquad 2.10.9$$

On rearrangement, this becomes

$$k_1(n_1^{(F)} - n_1^{(C)}) = k_2(n_2^{(F)} - n_2^{(C)}). \qquad 2.10.10$$

Now, making use of equations 2.10.1 and 2.10.6, we obtain the condition that the powers will be the same in red and blue:

$$\omega_1 P_1 + \omega_2 P_2 = 0. \qquad 2.10.11$$

Equations 2.10.8 and 2.10.11 together satisfy our two conditions and tell us what the powers of the two lenses must be to satisfy both of them.

For example, suppose that we want the focal length in yellow to be 16 cm ($P^{(D)} = 0.0625\ \text{cm}^{-1}$) and that the dispersive powers are 0.016 and 0.028. Equations 2.10.8 and 2.10.11 then tell us that we must have $P_1^{(D)} = 0.1458\dot{3}\ \text{cm}^{-1}$ and $P_2^{(D)} = -0.08\dot{3}\ \text{cm}^{-1}$. ($f_1 = 6.86$ cm and $f_2 = -12.0$ cm.)

If we want to make the first lens equibiconvex, so that $a = b$, and if $n_1 = 1.5$, equation 2.10.2 tells us that $a = 6.86$ cm, and equation 2.10.3 then tells us that $c = -144$ cm. That c is negative tells us that our assumption that the flint lens was concave to the right was wrong; it is convex to the right.

Exercise. Suppose that, instead of making the crown lens equibiconvex, you elect to make the last surface flat – i.e. $c = \infty$. What, then, must a and b be?

Answers. $a = 6.55$ cm, $b = 7.20$ cm.

2.11 *Thick Lenses*

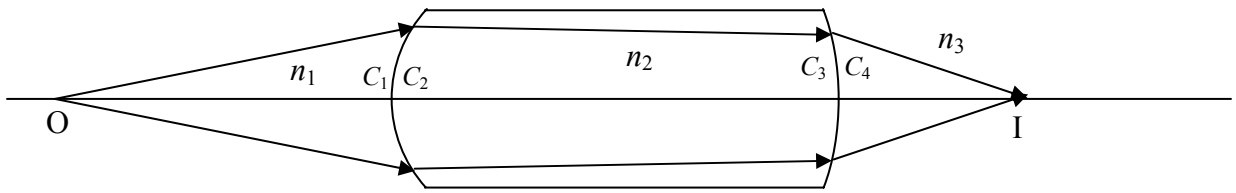

FIGURE II.16

Figure II.16 shows a thick lens of index n_2, an object O and an image I. For good measure I have put a medium of index n_1 to the left of the lens and a medium of index n_3 to the right of the lens. If you are given the position of O, can you calculate the position of the image?

Well, it is easy to calculate the convergence C_1 when the light arrives at the first surface. Then we can easily calculate the convergence C_2 merely by adding the power of the first interface. And, if we know C_3 (Aye, there's the rub) we can easily calculate C_4. We see that the key to solving thick lens problems is to know how convergence changes with distance, so we shall make that our next aim.

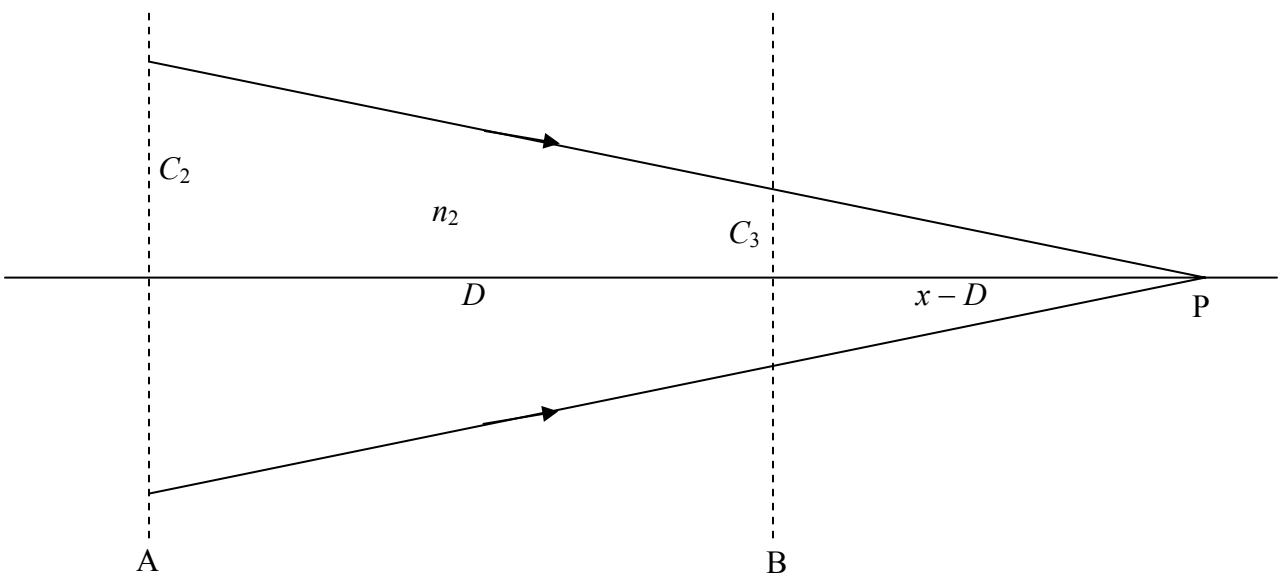

FIGURE II.17

Figure II.17 shows a beam of light, in a medium of index n_2, converging to the point P, which is at a distance x from the plane A. The convergence of the beam as it leaves the

plane A is $C_2 = n_2 / x$. When it arrives at the plane B, which is at a distance D from the plane A, its convergence is $C_3 = n_2 /(x - D)$. When we eliminate x, we obtain

$$C_3 = \frac{n_2 C_2}{n_2 - DC_2} \qquad 2.11.1$$

for the formula that tells us how convergence changes with distance.

Let us now return to the problem of figure II.16. Let's suppose that the radii of curvature of the first and second faces are 15 and 25 cm respectively, and the distance between the faces is 50 cm. The refractive index of the glass is $n_2 = 1.60$. We'll suppose that there is water ($n_1 = 1.33$) to the left of the lens, and, to the right of the lens there is some liquid with refractive index 1.42. The object is 30 cm to the left of the first face. Where is the image?
The calculation goes as follows:

$$C_1 = -\frac{1.33}{30} = -0.044333 \text{ cm}^{-1}.$$

$$C_2 = C_1 + \frac{1.60 - 1.33}{+15} = -0.026333 \text{ cm}^{-1}.$$

$$C_3 = \frac{1.60 \times C_2}{1.60 - 50 \times C_2} = -0.014446 \text{ cm}^{-1}.$$

Notice that the light is diverging by the time that it reaches the second face.

$$C_4 = C_3 + \frac{1.42 - 1.60}{-25} = -0.007246 \text{ cm}^{-1}.$$

The light is still diverging, so the image is <u>virtual</u>. The distance of the image from the second face is 1.42 ÷ 0.007 246 = 196 cm, and it is to the <u>left</u> of the second face.

The magnification of a thick lens is easily found. The magnification produced by the first face is, as usual, C_1/C_2, and then there is a further magnification of C_3/C_4 produced by the second face. Thus the overall magnification is $\frac{C_1 C_3}{C_2 C_4}$, which is this case is +3.356. The image is <u>magnified</u> in size and it is <u>erect</u>.

This method for thick lenses can also be used for separated lenses and mirrors. Here's one: Figure II.18 shows a thin lens separated from a mirror, and an object 14 cm from the lens. Where is the image?

$$C_1 = -1/14 = -0.071420 \text{ cm}^{-1}.$$

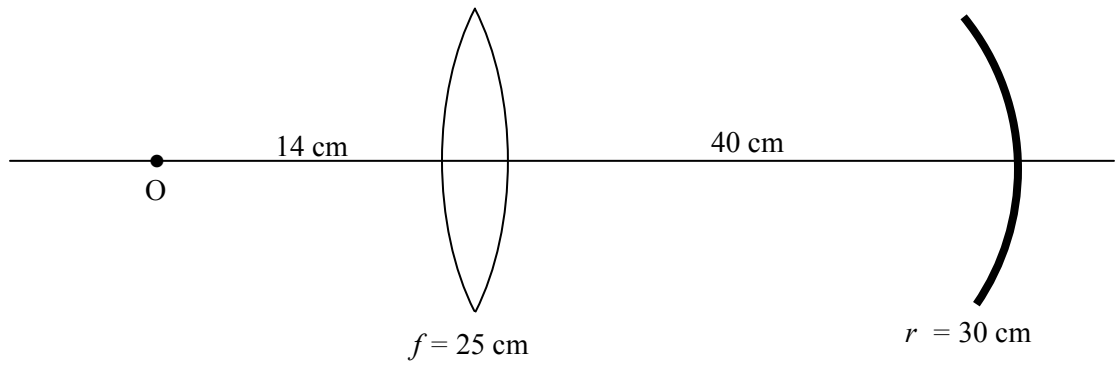

FIGURE II.18

$$C_2 = C_1 + 1/25 = -0.031429 \text{ cm}^{-1}.$$

$$C_3 = \frac{C_2}{1 - 40 \times C_2} = -0.013924 \text{ cm}^{-1}.$$

$$C_4 = C_4 + \frac{-2}{-30} = +0.052743 \text{ cm}^{-1}.$$

The image is <u>real</u>. It is 18.96 cm to the left of the mirror. The magnification is –0.60. The image is <u>inverted</u> and <u>diminished</u>.

Of course those who set examinations can think of all sorts of unpleasant questions. For example, we might have a thick lens and an object, but, instead of being asked to find the image, we may be told the image distance and asked to find the refractive index, or the thickness, or one of the radii. Or, even worse, we might not be told the image distance, but we might be told its magnification and whether it is real or virtual, or erect or inverted, and asked to find something else. There are endless possibilities! Here's one.

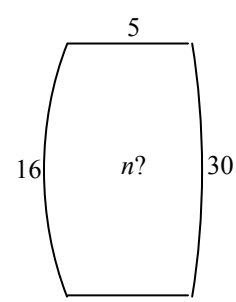

The lens shown has radii of curvature 16 and 30 cm, and is 5 cm thick. An object is 36 cm to the left of the 16 cm face. Its image is 50 cm to the right of the 30 cm surface. Show that the refractive index is the positive solution of

$$1845n^2 - 2417n - 520 = 0.$$

Here's another one:

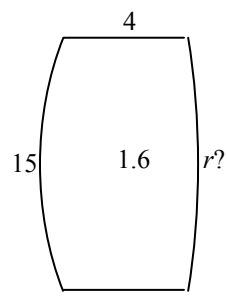

FIGURE II.19

The lens shown is 4 cm thick and the refractive index is 1.6. The radius of curvature of the first face is 15 cm. An object is 32 cm to the left of the 15 cm face. Its image is real, inverted and magnified by 22. Determine the radius of curvature of the second face.

Hints. The image is real. Which side of the lens is it? You can easily calculate C_1 , C_2 and C_3, so you should be able to get C_4 from the magnification. The answer, by the way, is 80.1 cm – but is it convex to the right, as shown, or is it concave to the right?

One more:

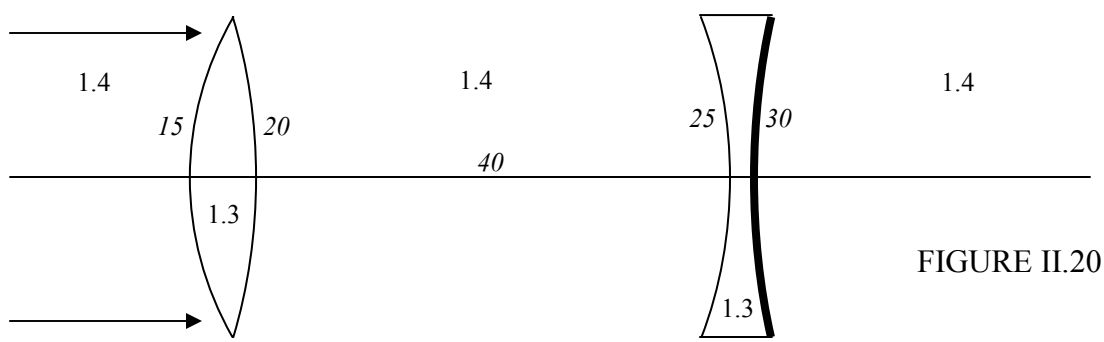

FIGURE II.20

The two lenses are made of a very light solid whose refractive index is only 1.3. (I'm not sure if there *is* such a stuff!) and they are immersed in a liquid of index 1.4. That means that the convex lens is diverging. The second surface of the second lens is a reflecting mirror. I have indicated the radii of curvature, and the lenses are 40 cm apart. Parallel light comes from the left. Where does it come to a focus?

The initial convergence $C_1 = 0$. I'll calculate the convergence after the light arrives at or leaves each surface or interface. I hope the notation will be clear. All convergences are in cm^{-1}.

$$C_2 = 0 + \frac{1.3 - 1.4}{+15} = -0.00\dot{6}.$$

$$C_3 = -0.00\dot{6} + \frac{1.4 - 1.3}{-20} = -0.011\dot{6}\,.$$

$$C_4 = \frac{1.4C_3}{1.4 - 40_3} = -0.00875\,.$$

$$C_5 = -0.00875 + \frac{1.3 - 1.4}{-25} = -0.00475\,.$$

$$C_6 = -0.00475 + \frac{-2\times 1.3}{30} = -0.0914\dot{1}6\,.$$

$$C_7 = -0.0914\dot{1}6 + \frac{1.4 - 1.3}{+25} = -0.0874\dot{1}6\,.$$

$$C_8 = \frac{1.4C_7}{1.4 - 40C_7} = -0.024\,993\,192\,65\,.$$

$$C_9 = C_8 + \frac{1.3 - 1.4}{-20} = -0.029\,993\,192\,65\,.$$

$$C_{10} = C_9 + \frac{1.4 - 1.3}{-15} = -0.036\,659\,859\,31\,.$$

Finally, $C_{10} = \dfrac{1.4}{x}$, so $x = -38.188\,908\,15 \left(= -\dfrac{22035}{577}\right)$ cm.

That is, the focus is 38.2 cm to the right of the convex lens, or 1.8 cm to the left of the concave lens.

2.12 *The Lazy Way*

The convergence and power method has great advantages when you have a complex systems of many lenses, mirrors and interfaces in succession. You just add the powers one after the other. But I expect there are some readers who don't want to be bothered with all of that, and just want to do simple single-lens calculations with a simple formula that they are accustomed to, in particular the well-known $\frac{1}{p}+\frac{1}{q}=\frac{1}{f}$, which is appropriate for the "real is positive" sign convention – and they want to get the calculation over with as soon as possible and with as little effort as possible. This section is for them! I have drawn a simple diagram in figure II.21. It is not extremely accurate – it is the best I can do with this infernal machine that I am sitting in front of. All you need in order to draw a really good version of it is a sheet of graph paper. There are three axes, labelled p, q and f. For any particular problem, to solve the above equation, all you do is to lay the edge of a ruler across the figure. For example: $p = 40$ cm, $f = 26$ cm. What is q? The dashed line gives the answer: $q = 75$ cm. Another example: $p = 33$ cm, $q = -60$ cm. What is f? The dotted line gives the answer: $f = 73$ cm.

This diagram can also be used for resistors in parallel, capacitors in series, synodic and sidereal periods of planets...

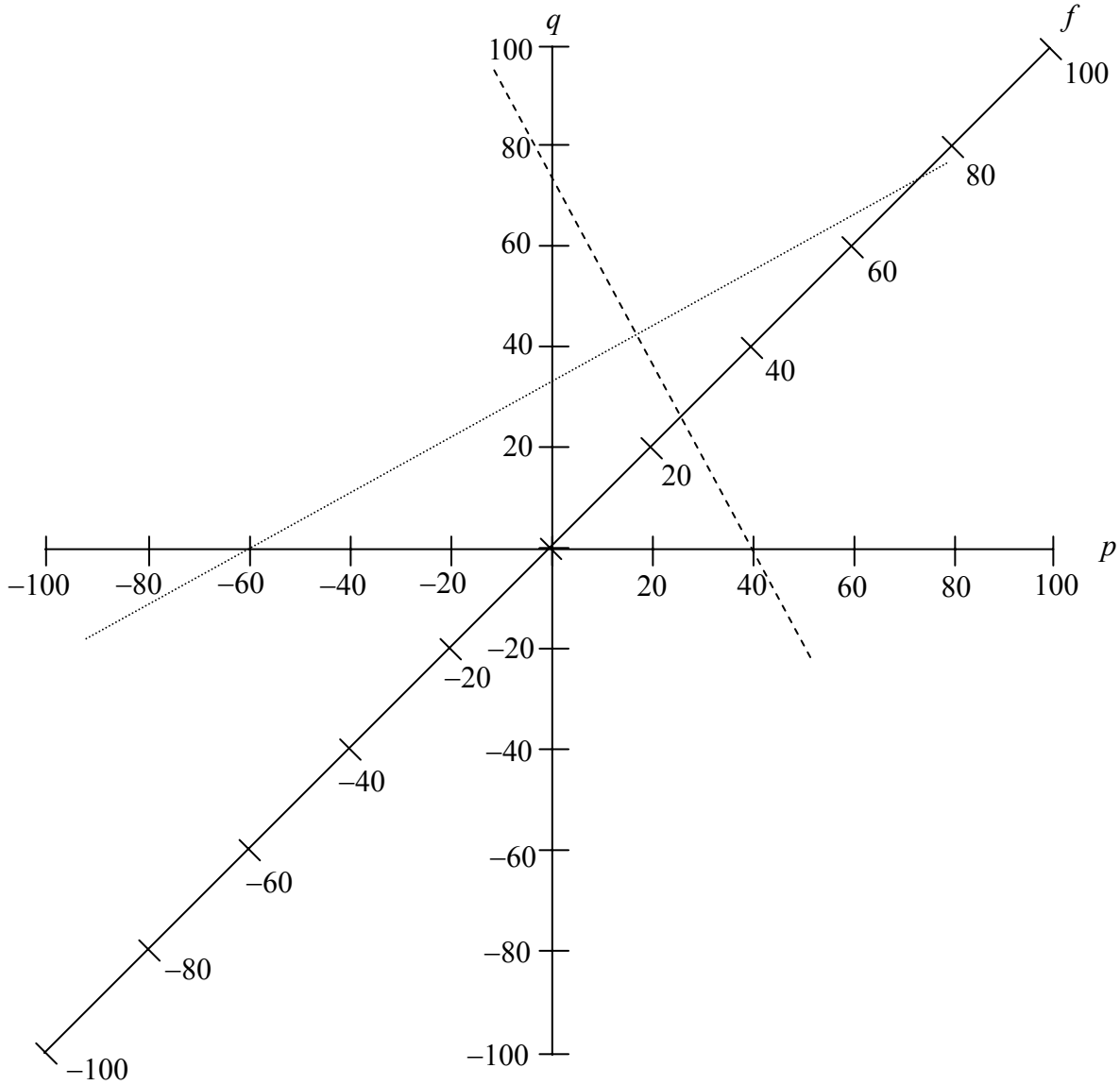

FIGURE II.21