CHAPTER 7
FORCE ON A CURRENT IN A MAGNETIC FIELD

7.1 *Introduction*

In Chapter 6 we showed that when an electric current is situated in an external magnetic field it experiences a force at right angles to both the current and the field. Indeed we used this to *define* both the *magnitude* and *direction* of the magnetic field. The magnetic field is defined in magnitude and direction such that the force per unit length $\mathbf{F'}$ on the current is given by

$$\mathbf{F'} = \mathbf{I} \times \mathbf{B}. \qquad 1.7.1$$

7.2 *Force Between Two Current-carrying Wires*

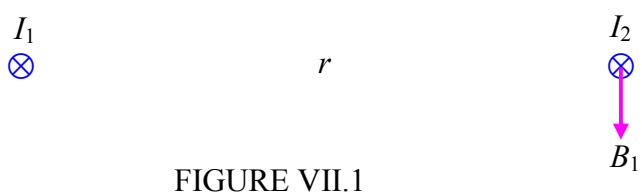

FIGURE VII.1

In figure VII.1, we have two parallel currents, I_1 and I_2, each directed away from you (i.e. into the plane of the paper) and a distance r apart. The current I_1 produces a magnetic field at I_2, directed downward as shown, and of magnitude $B = \mu I_1/(2\pi r)$, where μ is the permeability of the medium in which the two wires are immersed. Therefore, following equation 7.1.1, I_2 experiences a force per unit length towards the left $F' = \mu I_1 I_2/(2\pi r)$. You must also go through the same argument to show that the force per unit length on I_1 from the magnetic field produced by I_2 is of the same magnitude but directed towards the right, thus satisfying Newton's third law of motion.

Thus the force of attraction per unit length between two parallel currents a distance r apart is

$$F' = \frac{\mu I_1 I_2}{2\pi r}. \qquad 7.2.1$$

7.3 *The Permeability of Free Space*

If each of the currents in the arrangement of Section 7.2 is one amp, and if the distance r between to two wires is one metre, and if the experiment is performed in a vacuum, so that $\mu = \mu_0$, then the force per unit length between the two wires is $\mu_0/(2\pi)$ newtons per metre. But we have already (in Chapter 6) *defined the amp* in such a manner that this force is 2×10^{-7} N m^{-1}. Therefore it follows from our definition of the amp that the permeability of free space, by definition, has a value of exactly

$$\mu_0 = 4\pi \times 10^{-7} \text{ T m A}^{-1}, \qquad 7.3.1$$

or, as we shall learn to express it in a later chapter, $4\pi \times 10^{-7}$ henrys per metre, H m^{-1}.

7.4 *Magnetic Moment*

If a compass needle, or indeed any bar magnet, is placed in an external magnetic field, it experiences a *torque* – the one exception being if the needle is placed exactly along the direction of the field. The torque is greatest when the needle is oriented at right angles to the field.

Definition. The *magnetic moment* of a magnet is equal to the maximum torque it experiences when in unit magnetic field.

As already noted this maximum torque is experienced when the magnet is at right angles to the magnetic field. In SI units, "unit magnetic field" means, of course, one tesla, and the SI units of magnetic moment are N m T^{-1}, or newton metres per tesla. The reader should look up (or deduce) the dimension of magnetic field (teslas) and then show that the dimensions of magnetic moment are L^2 T^{-1}Q.

It is noted here that many different definitions of and units for magnetic moment are to be found in the literature, not all of which are correct or even have the correct dimensions. This will be discussed in a later chapter. In the meantime the definition we have given above is standard in the Système International.

7.5 *Magnetic moment of a Plane, Current-carrying Coil*

A plane, current carrying coil also experiences a torque in an external magnetic field, and its behaviour in a magnetic field is quite similar to that of a bar magnet or a compass needle. The torque is maximum when the *normal* to the coil is perpendicular to the magnetic field, and the magnetic moment is defined in exactly the same way, namely the maximum torque experienced in unit magnetic field.

Let us examine the behaviour of a rectangular coil of sides a and b, which is free to rotate about the dashed line shown in figure VII.2.

FIGURE VII.2

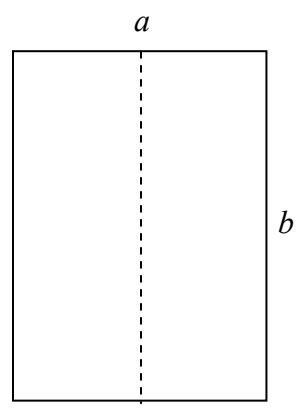

In figure VII.3 I am looking down the axis represented by the dashed line in figure VII.2, and we see the coil sideways on. A current I is flowing around the coil in the directions indicated by the symbols ⊙ and ⊗. The normal to the coil makes an angle θ with respect to an external field **B**.

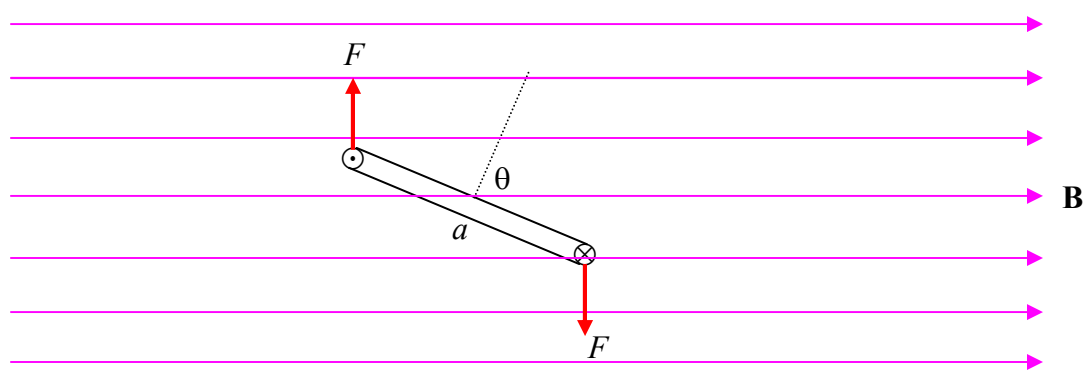

FIGURE VII.3

According to the Biot-Savart law there is a force F on each of the b-length arms of magnitude bIB, or, if there are N turns in the coil, $F = NbIB$. These two forces are opposite in direction and constitute a couple. The perpendicular distance between the two forces is $a \sin\theta$, so the torque τ on the coil is $NabIB \sin\theta$, or $\tau = NAIB \sin\theta$, where A is the area of the coil. This has its greatest value when $\theta = 90^{\circ}$, and so the magnetic moment of the coil is NIA. This shows that, in *SI* units, magnetic moment can equally well be expressed in units of A m^2, or ampere metre squared, which is dimensionally entirely equivalent to N m T^{-1}. Thus we have

$$\tau = p_{\mathrm{m}} B \sin\theta, \qquad 7.5.1$$

where, for a plane current-carrying coil, the magnetic moment is

$$p_m = NIA\,. \qquad 7.5.2$$

This can conveniently be written in vector form:

$$\boldsymbol{\tau} = \mathbf{p_m} \times \mathbf{B}\,, \qquad 7.5.3$$

where, for a plane current-carrying coil,

$$\mathbf{p_m} = NI\mathbf{A}\,. \qquad 7.5.4$$

Here **A** is a vector normal to the plane of the coil, with the current flowing clockwise around it. The vector $\boldsymbol{\tau}$ is directed into the plane of the paper in figure VII.3

The formula *NIA* for the magnetic moment of a plane current-carrying coil is not restricted to rectangular coils, but holds equally for plane coils of any shape; for (see figure VII.4) any curve can be described in terms of an infinite number of infinitesimally small vertical and horizontal segments.

FIGURE VII.4

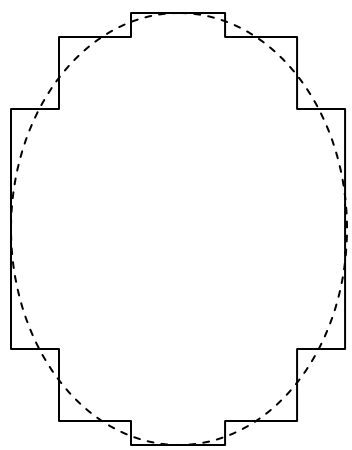

7.6 *Period of Oscillation of a Magnet or a Coil in an External Magnetic Field*

$$P = 2\pi\sqrt{\frac{I}{p_{\mathrm{m}}B}}\,. \qquad 7.6.1$$

For a derivation of this, see the derivation in Section 3.3 for the period of oscillation of an electric dipole in an electric field. Also, verify that the dimensions of the right hand side of equation 7.6.1 are T. In this equation, what does the symbol I stand for?

7.7 *Potential Energy of a Magnet or a Coil in a Magnetic Field*

$$E = \text{constant} - \mathbf{p_m} \cdot \mathbf{B} . \qquad 7.7.1$$

For a derivation of this, see the derivation in Section 3.4 for the potential energy of an electric dipole in an electric field. Also, verify that the dimensions of the right hand side of equation 7.7.1 are ML^2T^{-2} (energy).

7.8 *Moving-coil Ammeter*

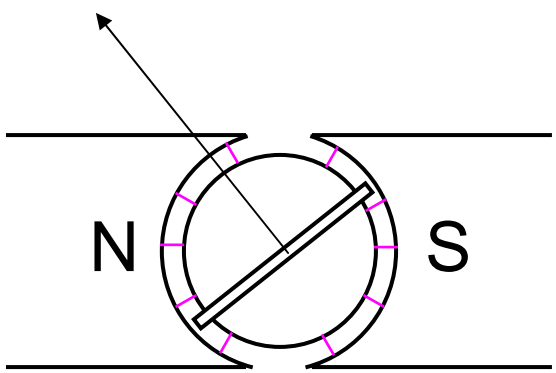

FIGURE VII.5

The current is led into the coil of N turns through a spiral spring of torsion constant c. The coil is between two poles of a specially-shaped magnet, and there is an iron cylinder inside the coil. This ensures that the magnetic field is everywhere parallel to the plane of the coil; that is, at right angles to its magnetic moment vector. This ensures that the deflection of the coil increases linearly with current, for there is no sin θ factor. When a current flows through the coil, the torque on it is $NABI$, and this in counteracted by the torque $c\theta$ of the holding springs. Thus the current and deflection are related by

$$NABI = c\theta . \qquad 7.8.1$$

7.9 *Magnetogyric Ratio*

The magnetic moment and the angular momentum are both important properties of subatomic particles. Each of them, however, depends on the angular speed of rotation of the particle. The *ratio* of magnetic moment to angular momentum, on the other hand, is independent of the speed of rotation, and tells us something about how the mass and charge are distributed within the particle. Also, it can be measured with higher precision than either the magnetic moment of the angular momentum separately. This ratio is called the *magnetogyric ratio* (or, perversely and illogically, by some, the "gyromagnetic ratio"). You should be able to show that the dimensions of the magnetogyric ratio are QM^{-1}, and therefore the SI unit is C kg^{-1}. I doubt, however, if many particle physicists use such simple units. They probably express magnetic moment in Bohr magnetons or nuclear magnetons and angular momentum in units of Planck's constant divided by 2π – but that is not our problem.

Let us calculate the magnetogyric ratio of a point charge and point mass moving in a circular orbit – rather like the electron moving around the proton in the simplest model of a hydrogen atom. We'll suppose that the angular speed in the orbit is ω and the radius of the orbit is a. The angular momentum is easy – it is just $ma^2\omega$. The frequency with which the particle (whose charge is Q) passes a given point in its orbit is $\omega/(2\pi)$, so the current is $Q\omega/(2\pi)$. The area of the orbit is πa^2 and so the magnetic moment of the orbiting particle is $\frac{1}{2}Q\omega a^2$. The magnetogyric ratio is therefore $Q/(2m)$.

The magnetogyric ratio will be the same as this in any spinning body in which the distributions of mass density and charge density inside the body are the same. Consider, however, the magnetogyric ratio of a charged, spinning metal sphere. The mass is distributed uniformly throughout the sphere, but the charge all resides on the surface. We may then expect the magnetogyric ratio to be rather larger than $q/(2m)$.

The angular momentum is easy. It is just $\frac{2}{5}ma^2\omega$. Now for the magnetic moment. Refer to figure VII.6.

FIGURE VII.6

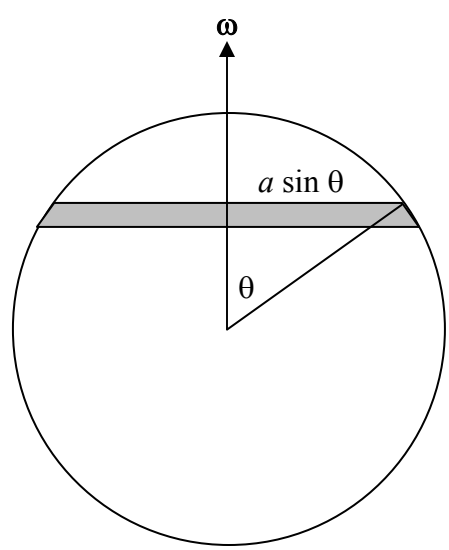

The area of the elemental zone shown is $2\pi a^2 \sin\theta\, d\theta$. The area of the entire sphere is $4\pi a^2$, so the charge on the elemental zone is $\frac{1}{2}Q\sin\theta\, d\theta$. The zone is spinning, as is the entire sphere, at an angular speed ω, so the current is

$$\tfrac{1}{2}Q\sin\theta\, d\theta \times \omega/(2\pi) = \frac{Q\omega\sin\theta\, d\theta}{4\pi}. \qquad 7.9.1$$

The area <u>enclosed by</u> the elemental zone is $\pi a^2 \sin^2\theta$. The magnetic moment dp_m of the zone is the current times the area enclosed, which is

$$dp_m = \tfrac{1}{4}Q\omega a^2 \sin^3\theta\, d\theta. \qquad 7.9.2$$

The magnetic moment of the entire sphere is found by integrating this from $\theta = 0$ to π, whence

$$p_m = \tfrac{1}{3}Q\omega a^2. \qquad 7.9.3$$

The ratio of the magnetic moment to the angular momentum is therefore $5Q/(6m)$.

Those who are familiar with gyroscopic motion will know that if a spinning body of angular momentum **L** is subject to a torque **τ**, the angular momentum vector will not be constant in direction and indeed the rate of change of angular momentum will be equal to **τ.** Figure VII.7 is a reminder of the motion of a top in regular precession (that is, with no nutation).

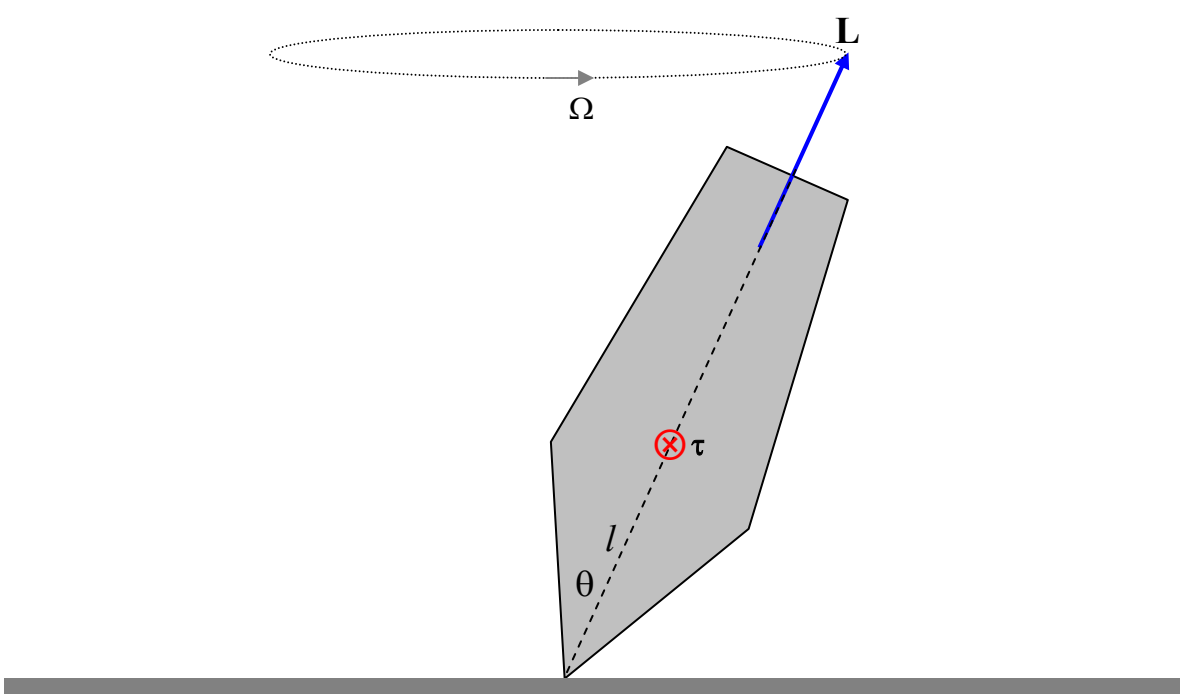

FIGURE VII.7

A study of Chapter 4 Section 4.10 of Classical Mechanics will be needed for a more detailed understanding of the motion of a top. The top is subject to a torque of magnitude $mgl\sin\theta$. The torque can be represented by a vector $\boldsymbol{\tau}$ directed into the plane of the paper. As drawn, the angular momentum vector $\mathbf{L}$ makes an angle θ with the gravitational field $\mathbf{g}$, and it precesses about the vertical with an angular velocity $\boldsymbol{\Omega}$, the three vectors $\boldsymbol{\tau}$, $\mathbf{L}$ and $\boldsymbol{\Omega}$ being related by $\boldsymbol{\tau} = \mathbf{L} \times \boldsymbol{\Omega}$. The magnitude of the angular momentum vector is therefore $\tau/(L \sin \theta)$. But $\tau = mgl \sin \theta$, so that the precessional frequency is mgl/L, independent of θ. Likewise a charged spinning body with a magnetic moment of $\mathbf{p}_\mathrm{m}$ is a magnetic field $\mathbf{B}$ experiences a torque $\boldsymbol{\tau} = \mathbf{p}_\mathbf{m} \times \mathbf{B}$, which is of magnitude $p_\mathrm{m}B \sin \theta$, and consequently its angular momentum vector precesses around $\mathbf{B}$ at an angular speed $\frac{p_m}{L}B$, independent of θ. (Verify that this has dimensions T^{-1}.) The coefficient of B here is the magnetogyric ratio. The precessional speed can be measured very precisely, and hence the magnetogyric ratio can be measured correspondingly precisely. This phenomenon of "Larmor precession" is the basis of many interesting instruments and disciplines, such as the proton precession magnetometer, nuclear magnetic resonance spectroscopy and nuclear magnetic resonance imaging used in medicine. Because anything including the word "nuclear" is a politically incorrect phrase, the word "nuclear" is usually dropped, and nuclear magnetic resonance imaging is usually called just "magnetic resonance imaging", or MRI, which doesn't quite make sense, but at least is politically correct.