CHAPTER 1
CENTRES OF MASS

1.1 *Introduction, and some definitions.*

This chapter deals with the calculation of the positions of the centres of mass of various bodies. We start with a brief explanation of the meaning of centre of mass, centre of gravity and centroid, and a very few brief sentences on their physical significance. Many students will have seen the use of calculus in calculating the positions of centres of mass, and we do this for

Plane areas
- i for which the equation is given in *x*-*y* coordinates;
- ii for which the equation is given in polar coordinates.

Plane curves
- i for which the equation is given in *x*-*y* coordinates;
- ii for which the equation is given in polar coordinates.

Three dimensional figures such as solid and hollow hemispheres and cones.

There are some figures for which interesting geometric derivations can be done without calculus; for example, triangular laminas, and solid tetrahedra, pyramids and cones. And the theorems of Pappus allow you to find the centres of mass of semicircular laminas and arcs in your head with no calculus.

First, some definitions.

Consider several point masses in the *x*-*y* plane:

m_1 at $(x_1\ , y_1)$

m_2 at $(x_2\ , y_2)$

etc.

The centre of mass is a point $(\bar{x}, \bar{y})$ whose coordinates are defined by

$$\bar{x} = \frac{\sum m_i x_i}{M} \qquad \bar{y} = \frac{\sum m_i y_i}{M} \qquad 1.1.1$$

where M is the total mass $\Sigma\, m_i$. The sum $\sum m_i x_i$ is the first moment of mass with respect to the y axis. The sum $\sum m_i y_i$ is the first moment of mass with respect to the x axis.

If the masses are distributed in three dimensional space, with m_1 at (x_1, y_1, z_1), etc,. the centre of mass is a point $(\bar{x}, \bar{y}, \bar{z})$ such that

$$\bar{x} = \frac{\sum m_i x_i}{M} \qquad \bar{y} = \frac{\sum m_i y_i}{M} \qquad \bar{z} = \frac{\sum m_i z_i}{M} \qquad 1.1.2$$

In this case, $\sum m_i x_i, \sum m_i y_i, \sum m_i z_i$ are the first moments of mass with respect to the *y-z, z-x* and *x-y* planes respectively.

In either case we can use vector notation and suppose that $\mathbf{r_1}$, $\mathbf{r_2}$, $\mathbf{r_3}$ are the position vectors of m_1, m_2 , m_3 with respect to the origin, and the centre of mass is a point whose position vector $\bar{\mathbf{r}}$ is defined by

$$\bar{\mathbf{r}} = \frac{\sum m_i \mathbf{r}_i}{M}. \qquad 1.1.3$$

In this case the sum is a vector sum and $\sum m_i \mathbf{r}_i$, a vector quantity, is the first moment of mass with respect to the <u>origin</u>. Its scalar components in the two dimensional case are the moments with respect to the <u>axes</u>; in the three dimensional case they are the moments with respect to the <u>planes</u>.

Many early books, and some contemporary ones, use the term "centre of gravity". Strictly the centre of gravity is a point whose position is defined by the ratio of the first moment of weight to the total weight. This will be identical to the centre of mass provided that the strength of the gravitational field *g* (or gravitational acceleration) is the same throughout the space in which the masses are situated. This is usually the case, though it need not necessarily be so in some contexts.

For a plane geometrical figure, the centroid or centre of area, is a point whose position is defined as the ratio of the first moment of area to the total area. This will be the same as the position of the centre of mass of a plane lamina of the same size and shape provided that the lamina is of uniform surface density.

Calculating the position of the centre of mass of various figures could be considered as merely a make-work mathematical exercise. However, the centres of gravity, mass and area have important applications in the study of mechanics.

For example, most students at one time or another have done problems in static equilibrium, such as a ladder leaning against a wall. They will have dutifully drawn vectors indicating the forces on the ladder at the ground and at the wall, and a vector indicating the weight of the ladder. They will have drawn this as a single arrow at the centre of gravity of the ladder as if the entire weight of the ladder could be "considered to act" at the centre of gravity. In what sense can we take this liberty and "consider all the weight as if it were concentrated at the centre of gravity"? In fact

the ladder consists of many point masses (atoms) all along its length. One of the equilibrium conditions is that there is no net torque on the ladder. The definition of the centre of gravity is such that the sum of the moments of the weights of all the atoms about the base of the ladder is equal to the total weight times the horizontal distance to the centre of gravity, and it is in that sense that all the weight "can be considered to act" there. Incidentally, in this example, "centre of gravity" is the correct term to use. The distinction would be important if the ladder were in a nonuniform gravitational field.

In dynamics, the total linear momentum of a system of particles is equal to the total mass times the velocity of the centre of mass. This may be "obvious", but it requires formal proof, albeit one that follows very quickly from the definition of the centre of mass.

Likewise the kinetic energy of a rigid body in two dimensions equals $\frac{1}{2}MV^2 + \frac{1}{2}I\omega^2$, where M is the total mass, V the speed of the centre of mass, I the rotational inertia and ω the angular speed, both around the centre of mass. Again it requires formal proof, but in any case it furnishes us with another example to show that the calculation of the positions of centres of mass is more than merely a make-work mathematical exercise and that it has some physical significance.

If a vertical surface is immersed under water (e.g. a dam wall) it can be shown that the total hydrostatic force on the vertical surface is equal to the area times the pressure at the centroid. This requires proof (readily deduced from the definition of the centroid and elementary hydrostatic principles), but it is another example of a physical application of knowing the position of the centroid.

1.2 *Plane triangular lamina*

Definition: A median of a triangle is a line from a vertex to the mid point of the opposite side.

Theorem I. The three medians of a triangle are concurrent (meet at a single, unique point) at a point that is two-thirds of the distance from a vertex to the mid point of the opposite side.

Theorem II. The centre of mass of a uniform triangular lamina (or the centroid of a triangle) is at the meet of the medians.

The proof of I can be done with a nice vector argument (figure I.1):

Let **A**, **B** be the vectors OA, OB. Then **A** + **B** is the diagonal of the parallelogram of which OA and OB are two sides, and the position vector of the point C_1 is $\frac{1}{3}(\mathbf{A} + \mathbf{B})$.

To get C_2 , we see that

$$\mathbf{C}_2 = \mathbf{A} + \tfrac{2}{3}(\mathrm{AM}_2) = \mathbf{A} + \tfrac{2}{3}(\mathbf{M_2} - \mathbf{A}) = \mathbf{A} + \tfrac{2}{3}(\tfrac{1}{2}\mathbf{B} - \mathbf{A}) = \tfrac{1}{3}(\mathbf{A} + \mathbf{B})$$

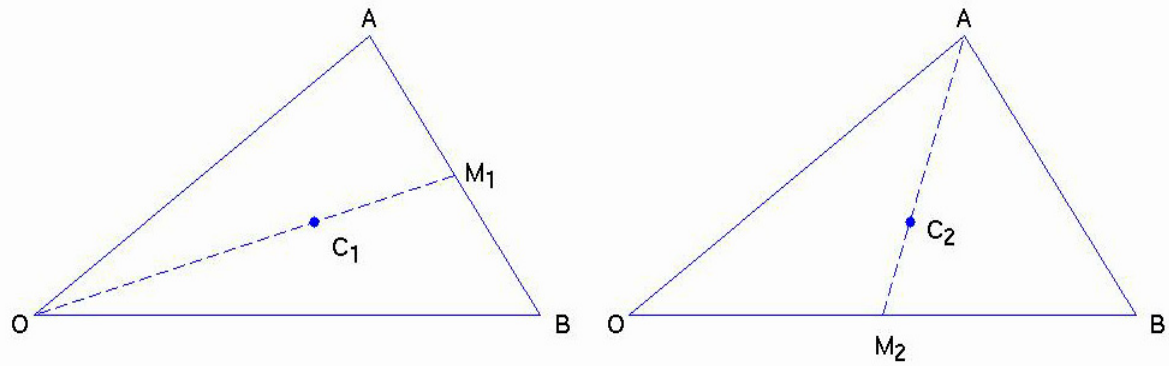

FIGURE I.1

Thus the points C_1 and C_2 are identical, and the same would be true for the third median, so Theorem I is proved.

Now consider an elemental slice as in figure I.2. The centre of mass of the slice is at its mid-point. The same is true of any similar slices parallel to it. Therefore the centre of mass is on the locus of the mid-points - i.e. on a median. Similarly it is on each of the other medians, and Theorem II is proved.

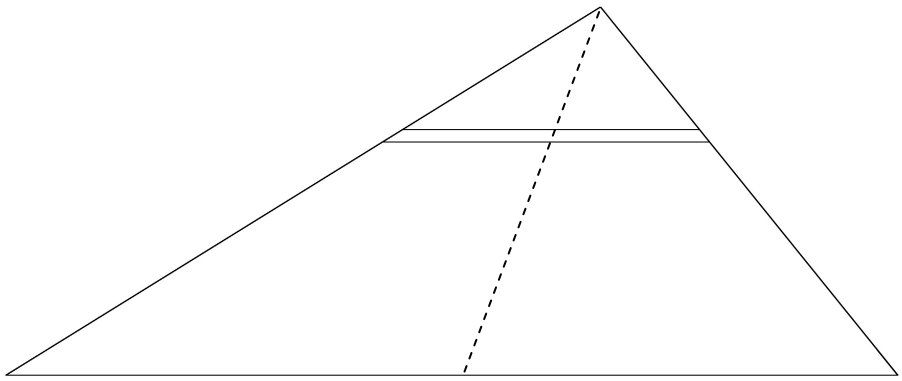

FIGURE 1.2

That needed only some vector geometry. We now move on to some calculus.

1.3 *Plane areas.*

Plane areas in which the equation is given in x-y coordinates

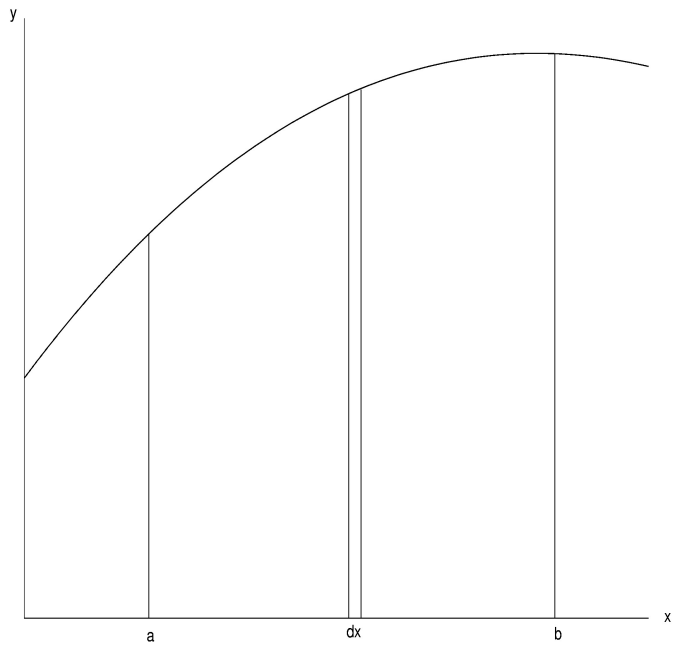

FIGURE I.3

We have a curve $y = y(x)$ (figure I.3) and we wish to find the position of the centroid of the area under the curve between $x = a$ and $x = b$. We consider an elemental slice of width δx at a distance x from the y axis. Its area is $y\delta x$, and so the total area is

$$A = \int_a^b y dx \qquad 1.3.1$$

The first moment of area of the slice with respect to the y axis is $xy\delta x$, and so the first moment of the entire area is $\int_a^b xydx$.

Therefore
$$\bar{x} = \frac{\int_a^b xydx}{\int_a^b ydx} = \frac{\int_a^b xydx}{A} \qquad 1.3.2$$

For $\bar{y}$ we notice that the distance of the centroid of the slice from the x axis is $\frac{1}{2}y$, and therefore the first moment of the area about the x axis is $\frac{1}{2}y.y\delta x$.

Therefore $$\bar{y} = \frac{\int_a^b y^2 dx}{2A} \qquad 1.3.3$$

Example. Consider a semicircular lamina, $x^2 + y^2 = a^2, \quad x > 0$, see figure I.4:

FIGURE I.4

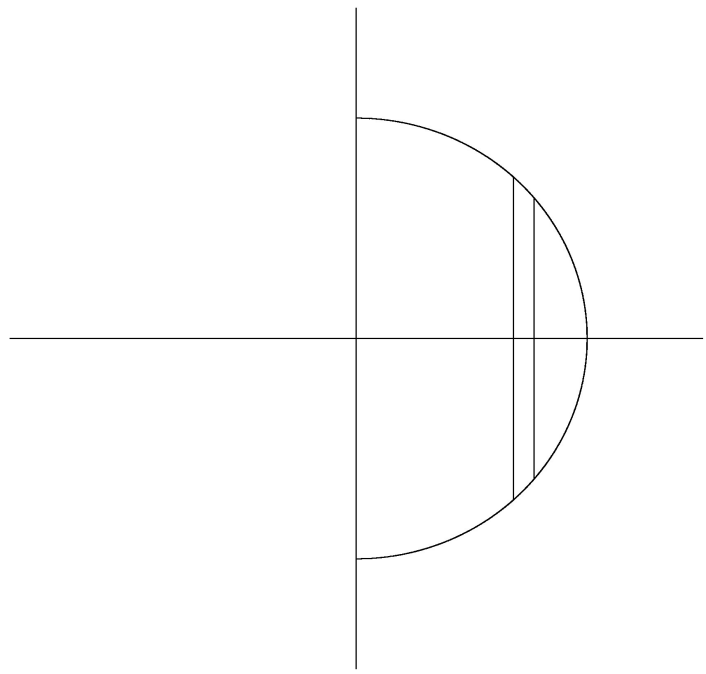

We are dealing with the parts both above and below the x axis, so the area of the semicircle is $A = 2\int_0^a y dx$ and the first moment of area is $2\int_0^a xydx$. You should find $\bar{x} = 4a/(3\pi) = 0.4244a$.

Now consider the lamina $x^2 + y^2 = a^2, \quad y > 0$ (figure I.5):

FIGURE I.5

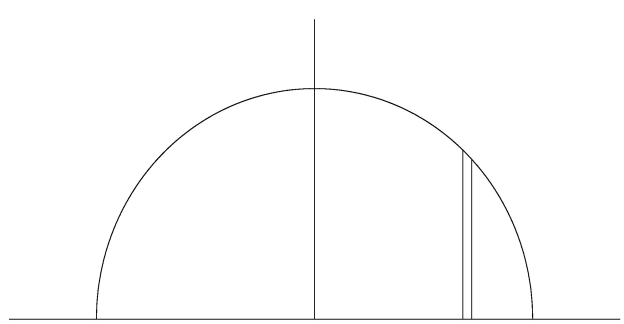

The area of the elemental slice this time is $y\delta x$ (not $2y\delta x$), and the integration limits are from $-a$ to $+a$. To find $\bar{y}$, use equation 1.3.3, and you should get $y = 0.4244a$.

Plane areas in which the equation is given in polar coordinates.

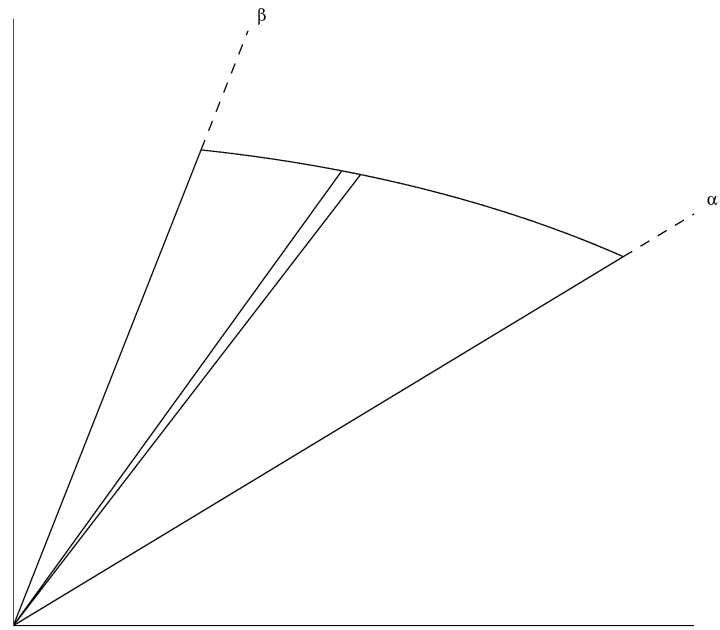

FIGURE I.6

We consider an elemental triangular sector (figure I.6) between θ and $\theta + \delta\theta$. The "height" of the triangle is r and the "base" is $r\delta\theta$. The area of the triangle is $\frac{1}{2}r^2\delta\theta$.

$$\text{Therefore the whole area} = \tfrac{1}{2}\int_{\alpha}^{\beta} r^2 d\theta. \qquad 1.3.4$$

The horizontal distance of the centroid of the elemental sector from the origin (more correctly, from the "pole" of the polar coordinate system) is $\frac{2}{3}r\cos\theta$. The first moment of area of the sector with respect to the y axis is

$$\tfrac{2}{3}r\cos\theta \times \tfrac{1}{2}r^2\delta\theta = \tfrac{1}{3}r^3\cos\theta\delta\theta$$

so the first moment of area of the entire figure between $\theta = \alpha$ and $\theta = \beta$ is

$$\tfrac{1}{3}\int_{\alpha}^{\beta} r^3 \cos\theta d\theta.$$

Therefore
$$\bar{x} = \frac{2\int_{\alpha}^{\beta} r^3 \cos\theta d\theta}{3\int_{\alpha}^{\beta} r^2 d\theta}. \qquad 1.3.5$$

Similarly
$$\bar{y} = \frac{2\int_{\alpha}^{\beta} r^3 \sin\theta d\theta}{3\int_{\alpha}^{\beta} r^2 d\theta}. \qquad 1.3.6$$

Example: Consider the semicircle $r = a$, $\theta = -\pi/2$ to $+\pi/2$.

$$\bar{x} = \frac{2a}{3}\frac{\int_{-\pi/2}^{+\pi/2} \cos\theta d\theta}{\int_{-\pi/2}^{+\pi/2} d\theta} = \frac{2a}{3\pi}\int_{-\pi/2}^{+\pi/2} \cos\theta d\theta = \frac{4a}{3\pi}. \qquad 1.3.7$$

The reader should now try to find the position of the centroid of a circular sector (slice of pizza!) of angle 2α. The integration limits will be $-\alpha$ to $+\alpha$. When you arrive at a formula (which you should keep in a notebook for future reference), check that it goes to $4a/(3\pi)$ if $\alpha = \pi/2$, and to $2a/3$ if $\alpha = 0$.

1.4 *Plane curves*

Plane curves in which the equation is given in x-y coordinates

FIGURE I.7

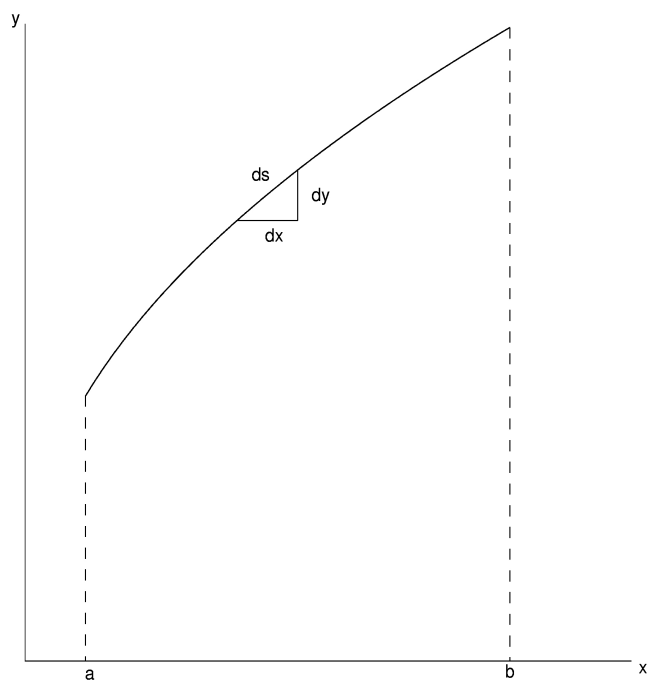

Figure I.7 shows how an elemental length δs is related to the corresponding increments in x and y:

$$\delta s = \left(\delta x^2 + \delta y^2\right)^{1/2} = \left[1 + (dy/dx)^2\right]^{1/2} \delta x = \left[(dx/dy)^2 + 1\right]^{1/2} \delta y. \qquad 1.4.1$$

Consider a wire of mass per unit length (linear density) λ bent into the shape $y = y(x)$ between $x = a$ and $x = b$. The mass of an element ds is $\lambda\, \delta s$, so the total mass is

$$\int \lambda ds = \int_a^b \lambda \left[1 + (dy/dx)^2\right]^{1/2} dx. \qquad 1.4.2$$

The first moments of mass about the y- and x-axes are respectively

$$\int_a^b \lambda x \left[1 + (dy/dx)^2\right]^{1/2} dx \quad \text{and} \quad \int_a^b \lambda y \left[1 + (dy/dx)^2)\right]^{1/2} dx. \qquad 1.4.3$$

If the wire is uniform and λ is therefore not a function of x or y, λ can come outside the integral signs in equations 1.12 and 1.13, and we hence obtain

$$\bar{x} = \frac{\int_a^b x\left[1 + (dy/dx)^2\right]^{1/2} dx}{\int_a^b \left[1 + (dy/dx)^2\right]^{1/2} dx}, \qquad \bar{y} = \frac{\int_a^b y\left[1 + (dy/dx)^2\right]^{1/2}}{\int_a^b \left[1 + (dy/dx)^2\right]^{1/2}}, \qquad 1.4.4$$

the denominator in each of these expressions merely being the total length of the wire.

Example: Consider a uniform wire bent into the shape of the semicircle $x^2 + y^2 = a^2$, $x > 0$.

First, it might be noted that one would expect $\bar{x} > 0.4244a$ (the value for a plane semicircular lamina).

The length (i.e. the denominator in equation 1.4.4) is just πa. Since there are, between x and $x + \delta x$, two elemental lengths to account for, one above and one below the x axis, the numerator of the first of equation 1.4.4 must be

$$2\int_0^a x\left[1 + (dy/dx)^2\right]^{1/2} dx.$$

In this case $$y = \left(a^2 - x^2\right)^{1/2}, \qquad \frac{dy}{dx} = \frac{-x}{\left(a^2 - x^2\right)^{1/2}}.$$

The first moment of length of the entire semicircle is

$$2\int_0^a x\left[1 + \frac{x^2}{a^2 - x^2}\right]^{1/2} dx = 2a\int_0^a \frac{xdx}{\left(a^2 - x^2\right)^{1/2}}.$$

From this point the student is left to his or her own devices to derive $\bar{x} = 2a/\pi = 0.6333a$.

Plane curves in which the equation is given in polar coordinates.

FIGURE I.8

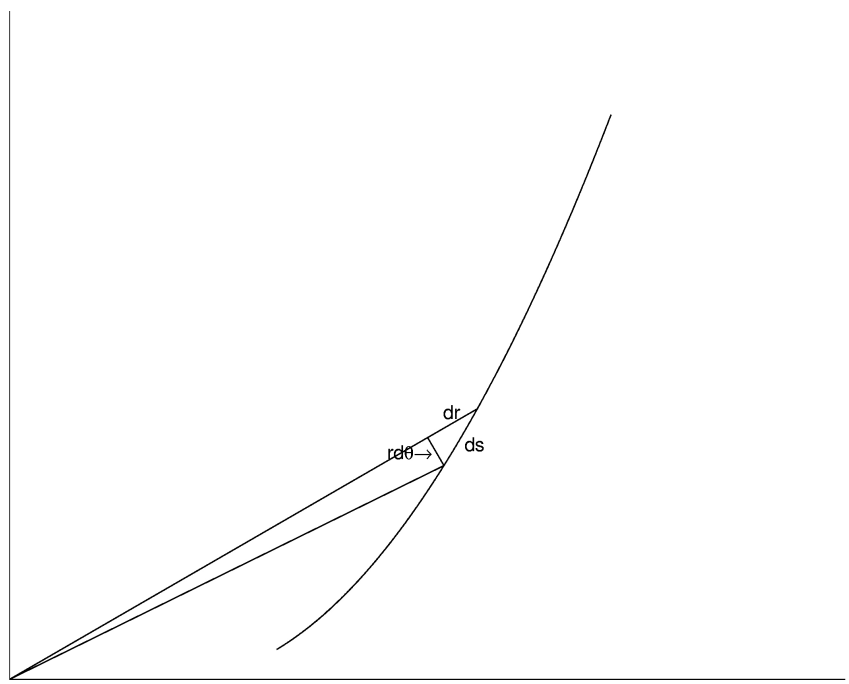

Figure I.8 shows how an elemental length δs is related to the corresponding increments in r and θ :

$$\delta s = \left[(\delta r)^2 + (r\delta\theta)^2\right]^{1/2} = \left[\left(\tfrac{dr}{d\theta}\right)^2 + r^2\right]^{1/2}\delta\theta = \left[1 + \left(r\tfrac{d\theta}{dr}\right)^2\right]^{1/2}\delta r. \qquad 1.4.5$$

The mass of the curve (between $\theta = \alpha$ and $\theta = \beta$) is

$$\int_\alpha^\beta \lambda\left[\left(\tfrac{dr}{d\theta}\right)^2 + r^2\right]^{1/2} d\theta\ .$$

The first moments about the y- and x-axes are (recalling that $x = r\cos\theta$ and $y = r\sin\theta$)

$$\int_\alpha^\beta \lambda r\cos\theta\left[\left(\tfrac{dr}{d\theta}\right)^2 + r^2\right]^{1/2} \text{ and } \int_\alpha^\beta \lambda r\sin\theta\left[\left(\tfrac{dr}{d\theta}\right)^2 + r^2\right]^{1/2} d\theta.$$

If λ is not a function of r or θ, we obtain

$$\bar{x} = \tfrac{1}{L}\int_\alpha^\beta r\cos\theta\left[\left(\tfrac{dr}{d\theta}\right)^2 + r^2\right]^{1/2} d\theta, \quad \bar{y} = \tfrac{1}{L}\int_\alpha^\beta r\sin\theta\left[\left(\tfrac{dr}{d\theta}\right)^2 + r^2\right]^{1/2} d\theta \qquad 1.4.6$$

where L is the length of the wire.

Example: Again consider the uniform wire of figure I.8 bent into the shape of a semicircle. The equation in polar coordinates is simply $r = a$, and the integration limits are $\theta = -\pi/2$ to $\theta = +\pi/2$. The length is πa.

Thus
$$\bar{x} = \frac{1}{\pi a}\int_{-\pi/2}^{+\pi/2} a\cos\theta\left[0 + a^2\right]^{1/2} d\theta = \frac{2a}{\pi}.$$

The reader should now find the position of the centre of mass of a wire bent into the arc of a circle of angle 2α. The expression obtained should go to $2a/\pi$ as α goes to $\pi/2$, and to a as α goes to zero.

1.5 *Summary of the formulas for plane laminas and curves*

SUMMARY

Uniform Plane Lamina	
$y = y(x)$	$r = r(\theta)$
$\bar{x} = \frac{1}{A}\int_a^b xy\,dx$	$\bar{x} = \dfrac{2\int_\alpha^\beta r^3 \cos\theta\, d\theta}{3\int_\alpha^\beta r^2 d\theta}$
$\bar{y} = \frac{1}{2A}\int_a^b y^2\,dx$	$\bar{y} = \dfrac{2\int_\alpha^\beta r^3 \sin\theta\, d\theta}{3\int_\alpha^\beta r^2 d\theta}$

Uniform Plane Curve	
$y = y(x)$	$r = r(\theta)$
$\bar{x} = \frac{1}{L}\int_a^b x\left[1 + \left(\frac{dy}{dx}\right)^2\right]^{1/2} dx$	$\bar{x} = \frac{1}{L}\int_\alpha^\beta r\cos\theta\left[\left(\frac{dr}{d\theta}\right)^2 + r^2\right]^{1/2} d\theta$
$\bar{y} = \frac{1}{L}\int_a^b y\left[1 + \left(\frac{dy}{dx}\right)^2\right]^{1/2} dx$	$\bar{y} = \frac{1}{L}\int_\alpha^\beta r\sin\theta\left[\left(\frac{dr}{d\theta}\right)^2 + r^2\right]^{1/2} d\theta$

1.6 *The Theorems of Pappus*.
(Pappus Alexandrinus, Greek mathematician, approximately 3rd or 4th century AD.)

I. If a plane area is rotated about an axis in its plane, but which does not cross the area, the volume swept out equals the area times the distance moved by the centroid.

.

II. If a plane curve is rotated about an axis in its plane, but which does not cross the curve, the area swept out equals the length times the distance moved by the centroid.

These theorems enable us to work out the volume of a solid of revolution if we know the position of the centroid of a plane area, or *vice versa*; or to work out the area of a surface of revolution if we know the position of the centroid of a plane curve or *vice versa*. It is not necessary that the plane or the curve be rotated through a full 360°.

We prove the theorems first. We then follow with some examples.

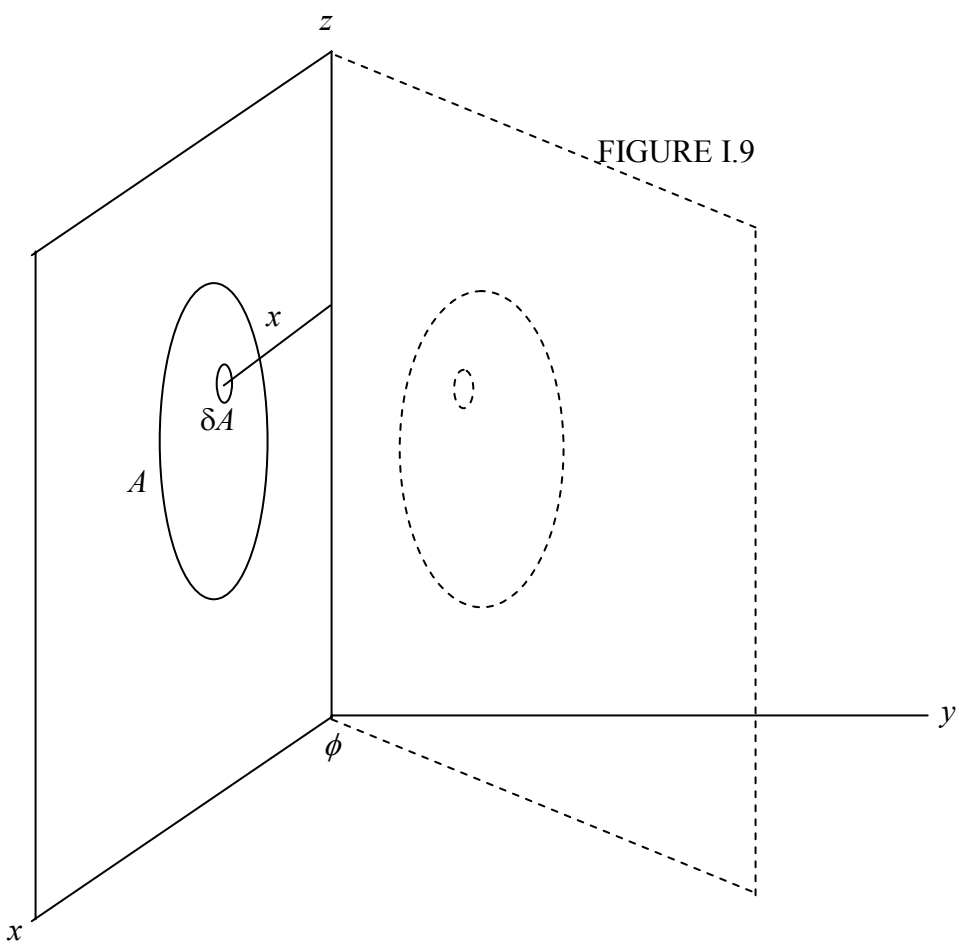

FIGURE I.9

Consider an area A in the zx plane (figure I.9), and an element δA within the area at a distance x from the z axis. Rotate the area through an angle ϕ about the z axis. The length of the arc traced by the element δA in moving through an angle ϕ is $x\phi$, so the volume swept out by δA is $x\phi\delta A$. The volume swept out by the entire area is $\phi\int xdA$. But the definition of the centroid of A is such that its distance from the z axis is given by $\bar{x}A = \int xdA$. Therefore the volume swept out by the area is $\phi\bar{x}A$. But $\phi\bar{x}$ is the distance moved by the centroid, so the first theorem of Pappus is proved.

FIGURE I.10

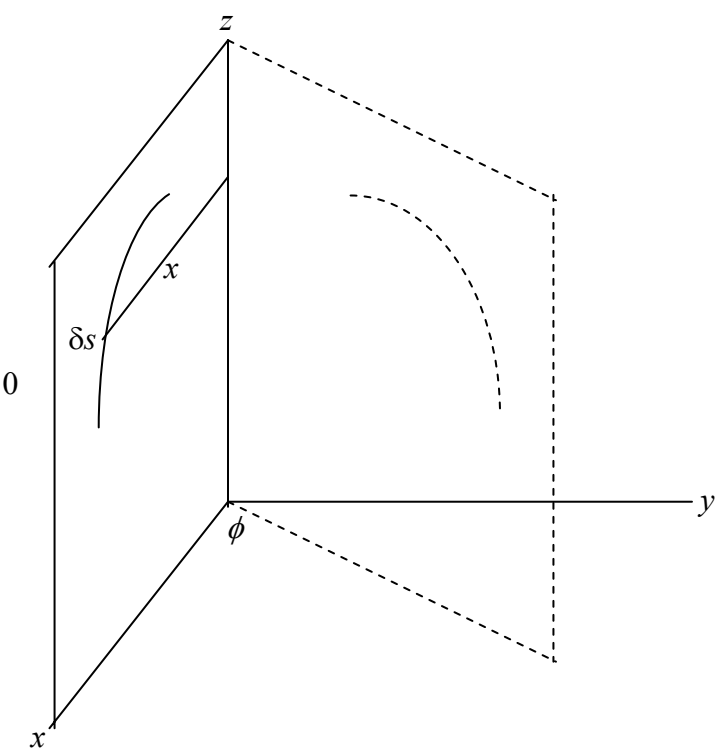

Consider a curve of length L in the zx plane (figure I.10), and an element δs of the curve at a distance x from the z axis. Rotate the curve through an angle ϕ about the z axis. The length of the arc traced by the element ds in moving through an angle ϕ is $x\phi$, so the area swept out by δs is $x\phi\delta s$. The area swept out by the entire curve is $\phi\int xds$. But the definition of the centroid is such that its distance from the z axis is given by $\bar{x}L = \int xds$. Therefore the area swept out by the curve is $\phi\bar{x}L$. But $\phi\bar{x}$ is the distance moved by the centroid, so the second theorem of Pappus is proved.

Applications of the Theorems of Pappus.

Rotate a plane semicircular figure of area $\frac{1}{2}\pi a^2$ through 360° about its diameter. The volume swept out is $\frac{4}{3}\pi a^3$, and the distance moved by the centroid is $2\pi\bar{x}$. Therefore by the theorem of Pappus, $\bar{x} = 4a/(3\pi)$.

Rotate a plane semicircular arc of length πa through 360° about its diameter. Use a similar argument to show that $\bar{x} = 2a/\pi$.

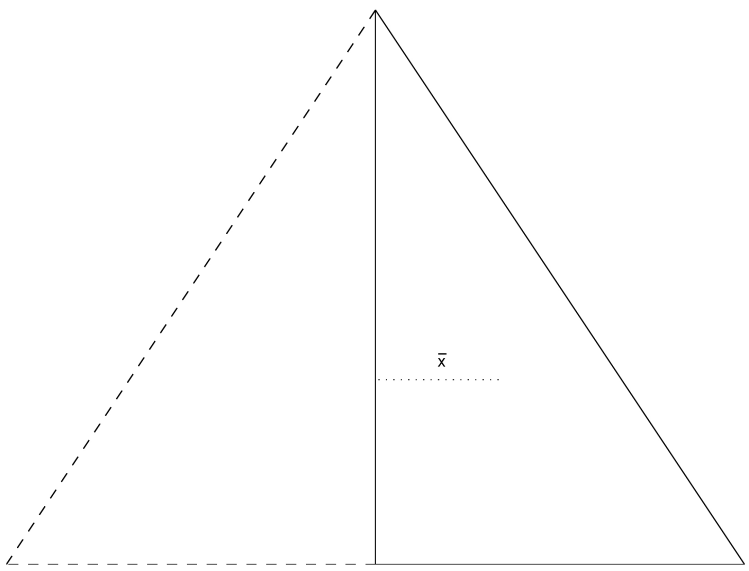

FIGURE I.11

Consider a right-angled triangle, height h, base a (figure I.11). Its centroid is at a distance $a/3$ from the height h. The area of the triangle is $ah/2$. Rotate the triangle through 360° about h. The distance moved by the centroid is $2\pi a/3$. The volume of the cone swept out is $ah/2$ times $2\pi a/3$, equals $\pi a^2 h/3$.

Now consider a line of length l inclined at an angle α to the y axis (figure I.12). Its centroid is at a distance $\frac{1}{2}l\sin\alpha$ from the y axis. Rotate the line through 360° about the y axis. The distance moved by the centroid is $2\pi\times\frac{1}{2}l\sin\alpha = \pi l\sin\alpha$. The surface area of the cone swept out is $l\times\pi l\sin\alpha = \pi l^2\sin\alpha$.

FIGURE I.12

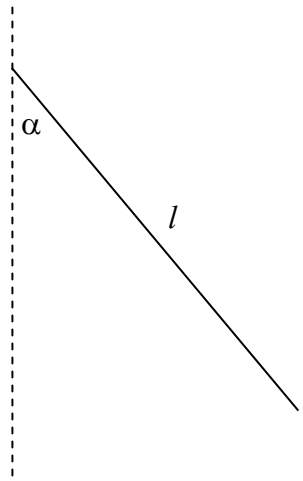

The centre of a circle of radius b is at a distance a from the y axis. It is rotated through 360° about the y axis to form a torus (figure I.13). Use the theorems of Pappus to show that the volume and surface area of the torus are, respectively, $2\pi^2 ab^2$ and $4\pi^2 ab$.

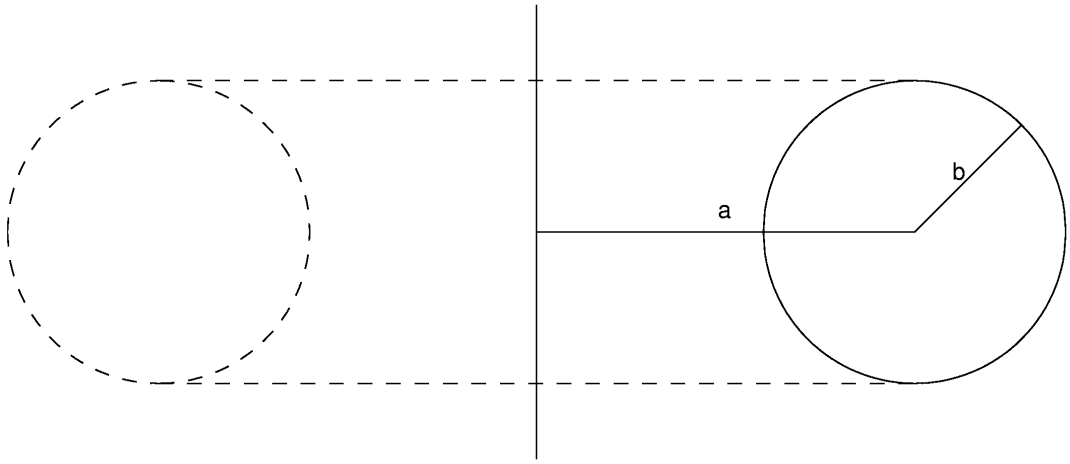

FIGURE I.13

1.7 *Uniform solid tetrahedron, pyramid and cone.*

Definition. A median of a tetrahedron is a line from a vertex to the centroid of the opposite face.

Theorem I. The four medians of a tetrahedron are concurrent at a point 3/4 of the way from a vertex to the centroid of the opposite face.

Theorm II. The centre of mass of a uniform solid tetrahedron is at the meet of the medians.

Theorem I can be derived by a similar vector geometric argument used for the plane triangle. It is slightly more challenging than for the plane triangle, and it is left as an exercise for the reader. I draw two diagrams (figure I.14). One shows the point C_1 that is 3/4 of the way from the vertex A to the centroid of the opposite face. The other shows the point C_2 that is 3/4 of the way from the vertex B to the centroid of its opposite face. . You should be able to show that

$$\mathbf{C}_1 = (\mathbf{A} + \mathbf{B} + \mathbf{D})/4.$$

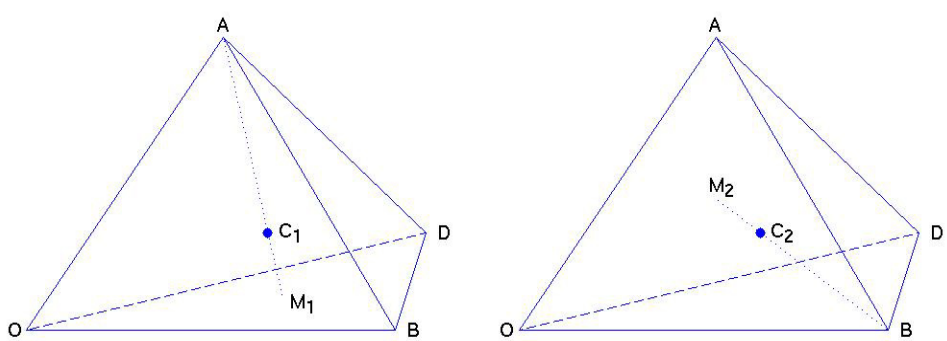

FIGURE I.14

In fact this suffices to prove Theorem I, because, from the symmetry between **A**, **B** and **D**, one is bound to arrive at the same expression for the three-quarter way mark on any of the four medians. But for reassurance you should try to show, from the second figure, that

$$\mathbf{C}_2 = (\mathbf{A} + \mathbf{B} + \mathbf{D})/4.$$

The argument for Theorem II is easy, and is similar to the corresponding argument for plane triangles.

Pyramid.

A right pyramid whose base is a regular polygon (for example, a square) can be considered to be made up of several tetrahedra stuck together. Therefore the centre of mass is 3/4 of the way from the vertex to the mid point of the base.

Cone.

A right circular cone is just a special case of a regular pyramid in which the base is a polygon with an infinite number of infinitesimal sides. Therefore the centre of mass of a uniform right circular cone is 3/4 of the way from the vertex to the centre of the base.

We can also find the position of the centre of mass of a solid right circular cone by calculus. We can find its volume by calculus, too, but we'll suppose that we already know, from the theorem of Pappus, that the volume is $\frac{1}{3} \times$ base $\times$ height.

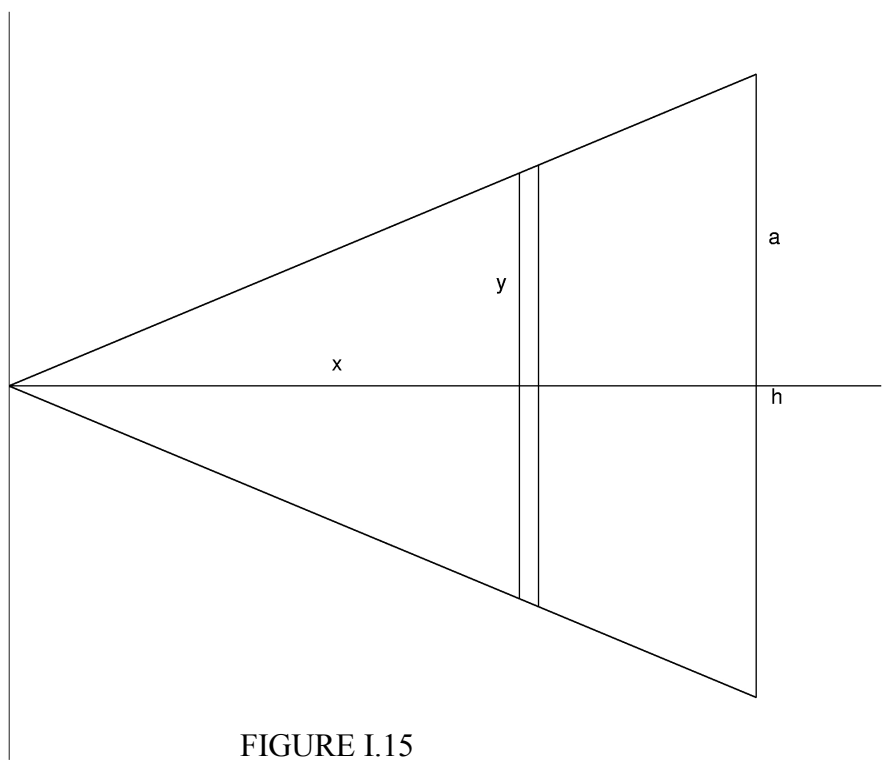

FIGURE I.15

Consider the cone in figure I.15, generated by rotating the line $y = ax/h$ (between $x = 0$ and $x = h$) through 360° about the x axis. The radius of the elemental slice of thickness δx at x is ax/h. Its volume is $\pi a^2 x^2 \delta x / h^2$.

Since the volume of the entire cone is $\pi a^2 h/3$, the mass of the slice is

$$M \times \frac{\pi a^2 x^2 \delta x}{h^2} \div \frac{\pi a^2 h}{3} = \frac{3Mx^2 \delta x}{h^3},$$

where M is the total mass of the cone. The first moment of mass of the elemental slice with respect to the y axis is $3Mx^3\delta x/h^3$.

The position of the centre of mass is therefore

$$\bar{x} = \frac{3}{h^3}\int_0^h x^3 dx = \tfrac{3}{4}h.$$

1.8 *Hollow cone.*

The surface of a hollow cone can be considered to be made up of an infinite number of infinitesimally slender isosceles triangles, and therefore the centre of mass of a hollow cone (without base) is 2/3 of the way from the vertex to the midpoint of the base.

1.9 *Hemispheres.*

Uniform solid hemisphere

Figure I.4 will serve. The argument is exactly the same as for the cone. The volume of the elemental slice is $\pi y^2 \delta x = \pi(a^2 - x^2)\delta x$, and the volume of the hemisphere is $2\pi a^3/3$, so the mass of the slice is

$$M \times \pi(a^2 - x^2)\delta x \div (2\pi a/3) = \frac{3M(a^2 - x^2)\delta x}{2a^3},$$

where M is the mass of the hemisphere. The first moment of mass of the elemental slice is x times this, so the position of the centre of mass is

$$\bar{x} = \frac{3}{2a^3}\int_0^a x(a^2 - x^2)dx = \frac{3a}{8}.$$

Hollow hemispherical shell.

We may note to begin with that we would expect the centre of mass to be further from the base than for a uniform solid hemisphere.

Again, figure I.4 will serve. The area of the elemental annulus is $2\pi a\delta x$ (NOT $2\pi y\delta x$!) and the area of the hemisphere is $2\pi a^2$. Therefore the mass of the elemental annulus is

$$M \times 2\pi a\delta x \ \div \ (2\pi a^2) \ = M\delta x / a.$$

The first moment of mass of the annulus is x times this, so the position of the centre of mass is

$$\bar{x} \ = \int_0^a \frac{x dx}{a} \ = \frac{a}{2}.$$

1.10 *Summary.*

SUMMARY

Triangular lamina: 2/3 of way from vertex to midpoint of opposite side

Solid Tetrahedron, Pyramid, Cone: 3/4 of way from vertex to midpoint of opposite face.

Hollow cone: 2/3 of way from vertex to midpoint of base.

Semicircular lamina: $4a/(3\pi)$

Lamina in form of a sector of a circle, angle 2α : $(2a \sin\alpha)/(3\alpha)$

Semicircular wire: $2a/\pi$

Wire in form of an arc of a circle, angle 2α: $(a \sin \alpha)/\alpha$

Solid hemisphere: $3a/8$

Hollow hemisphere: $a/2$