11/V-64г.

ОБЪЕДИНЕННЫЙ ИНСТИТУТ ЯДЕРНЫХ ИССЛЕДОВАНИЙ

ЛАБОРАТОРИЯ ЯДЕРНЫХ РЕАКЦИЙ

G.N.Flerov, V.A.Karnaukhov, G.M.Ter-Akopyan,
L.A.Petrov, V.G.Subbotin

D-1570

ON THE PROTON DECAY OF RADIOACTIVE NUCLEI

ЖЭТФ, 1964, т47, в2, с418-423.
Nucl. Phys., 1964, v60, n1, p129-143.
Congres Intern. de physique Nucleaire. Paris, 1964. v2
p.1144-1146.

Дубна 1964

G.N.Flerov, V.A.Karnaukhov, G.M.Ter-Akopyan,
L.A.Petrov, V.G.Subbotin

D-1570

ON THE PROTON DECAY OF RADIOACTIVE NUCLEI

Submitted to Nuclear Physics

Дубна 1964

Introduction

It is not for the first time that the literature considers the probability for the new type radioactive transformation of nuclei-proton decay. More than ten years ago the first attempts were undertaken by Alvarez, Birge et al, to detect proton emitters/1-4/. At the same time A.B.Migdal and B.T.Geilikman and B.S.Dzhelepov/5/, presented a theoretical consideration of probable proton decay mechanisms and certain ways of proton-active nuclei synthesis. It turned out to be clear that radioactive nuclei with a rather large proton excess would undergo the proton decay of either type. Further papers/6-10/ made the proposed p -decay characteristics more precise and considered the region of this phenomenon extension and the ways to obtain necessary isotopes, in more detail.

An energetic potentiality of proton decay appeares as a result of a proton binding energy reducing with the decrease of the number of neutrons in the nucleus. This change in the proton binding energy is stimulated by the dependence of a nuclear force magnitude on an isotopic number, and by the increase of the Coulomb repulsion. Some mechanisms for proton decay have been considered. First, the synthesis is possible of nuclei with a negative proton binding energy. These nuclei are unstable against proton emission from the ground state. In this case the p -decay picture will be analogous to that for α -decay from the nuclear ground state. Second, a two-stage mechanism is possible for proton decay: the first stage being a high-enrgy positron decay, and the second the emission of a proton from the excited (but in some cases from the ground) state of a daughter nucleus.

If a proton energy is lower than a coulomb barrier height, the proton will go abroad the nucleus penetrating through the barrier according to quantum mechanical laws. In this case the decay picture is similar to the long-range alpha emission. If a nucleus emits a proton of an energy exceeding the barrier, one can speak of the analogy with "delayed" neutrons.

We believe that the third mechanism can be possible for proton decay, namely, an isomeric one (see the discussion).

The z-even proton-excess isotopes are most probable to undergo the decay of another type, i.e., a two-proton one. The existence of this kind of decay can be supposed to be a result of the pair nucleon effect in the nucleus. In paper/11/ Ya.Zel'dovich pointed out, for the first time, to the probability for O^{12}, Ne^{16} and Mg^{19} unstability against the emission of two protons at once. V.I.Goldansky/8,12/ analyzed the probability for two-proton decay and considered the main features of this phenomenon and the ways to detect it.

To synthesyze the proton-excess isotopes, great advantages of nuclear heavy-ion induced reactions can be employed. Some years ago we started the experiments studying the radioactive products of the reactions induced by Ne^{20} accelerated ions ($E = 130$ MeV) in Ni. According to the calculations, there is a hope that the isotopes close to the boundary of nuclei instability would be detected among these products. A special instrumentation was employed for this purpose, which included a telescope consisting of two proportional counters (for the energy and specific ionization measurements). When detecting the radioactive decay, this apparatus could establish uniquely a radiation type.

In summer 1962 some results were obtained which permitted us to conclude that the reaction Ni + Ne gives rise to radioactive isotopes undergoing proton decay. The lifetime of these proton emitters turned out to be between 0.1 sec. and 5 min.[13]. In further experiments the half-lives were determined as 0.5 - 1 sec. and longer[14].

These results were confirmed and made more precise in our next work[15]. The "long-lived" proton activity appeared to have a half-life about 25 sec. and a proton energy between 2.5 and 3 MeV. The data on the range and formation cross-section measurements for this emitter have indicated that the latter results from the compound nucleus decay in the reaction Ni + Ni^{20}, i.e., in this case we deal with an emitter of deeply sub-barrier protons. In addition, the proton activity with an enegry about 5 MeV and a half-life of 0.1 sec. has been detected. This emitter is determined to be close to Ne^{20} by mass. In both cases proton emission seems to follow β^{+} -decay.

In 1963 a group of Canadian physicists reported the detection of a "delayed" proton radioactivity[16]. The experiments were carried out with a 97-MeV proton beam. A simple detecting apparatus was employed, the only component being a surface-barrier detector to measure the particle energy. In order to determine a type of particles, their slowing in Al was studied. A high background level did not permit the Canadian physicists to work in the region of energies lower than 2.5 MeV , and in the region of 3.5 MeV the background was almost equal to the effect. Nevertheless, they were lucky enough to detect some emitters.

Most thorough investigations have been carried out for Si^{25} ($T_{1/2} = 0.3^{+0.2}_{-0.1}$ sec.) though less detailed data are available on other proton emitters (Mg^{21}, Ne^{17} and O^{13}). However, we think that the authors overestimate the accuracy of the proton energy determination, the decay schemes they give can be rather considered as tentative ones.

Yale University physicists perform the experiments on the search for a proton emitter in heavy-ion-induced reactions. A.Preis[17] reports the observation of 4.0-5.5 MeV "delayed" protons generated from the decay of Ne^{17}, a half-life being about 0.7 sec. R.Fink et al (Argonne National Laboratory) investigated this nucleus, too, in experiments with Li beams[18].

The present paper is devoted to a more detailed account of the results listed in paper[16]. Besides, it includes some new information on the proton emitter observed.

Experimental Methods

The experiments were carried out with an internal beam from the JINR heavy-ion cyclotron. When developing the methods, we understood the need in such an apparatus which could permit us to detect protons with an energy of the order of 1 MeV against a more intensive (about 10^{6} times) background of β , γ -radiation. The particle detector should satisfy the requirements as follows: it should possess the spectrometric properties permitting us to determine a particle type, operate in the conditions of a strong magnetic field and at high levels of electromagnetic disturbances. Below the discription of these methods is given.

1. The Probe

Figure 1 gives the scheme of the device placed between the cyclotron dees. The accelerated ion beam (1) struck the target (2) and the reaction products were emitted from the target and stopped in the aluminium catcher foil which had been manufactured in the form of a rotating disk 8 cm in diameter. This kind of a catcher enabled us to transfer radioactive nuclei to the charged particle spectrometer.

The spectrometer consisted of a proportional counter 8 mm thick (6) and two high resistance silicon surface-barrier detectors (7) placed behind it. The use of such a "telesçope" made it possible to measure simultaneously the particle specific ionization and energy. The comparison of these values permits one to determine a particle type and to separate reliably protons from electrons and alphas. (When preparing the experiments, we were afraid of a background appearing due to the generation of unknown α -active nuclei with a mean atomic weight).

The telescope input window was either an Al 8μ thick foil, or a 5μ organic film cowered with evaporated copper (200μ g/ cm^{2}). The volume of the proportional counter was shielded from surface barier detectors by an organic film 3μ thick cowered with (evaporated) copper, too. The counter was filled with a mixture of Ar (95%) and CH_4(5%) at a 200 mm Hg pressure.

In the conditions of good geometry, outside the magnetic field, the proportional counter had a resolution about 3% for 5.5-MeV alphas, while the resolution for the detector was 1-1.5%. However, to enhance the efficiency, the telescope input window was made larger (2 x 5 cm) . At the same time two silicon detectors with sensitive surfaces were employed, 1.5-2 cm^2 in size each. It leads to a large angular spread of detected particles and to a lower resolution. In the case of the gaseous counter, an additional amplitude spread appeared owing to the effect of the cyclotron magnetic field.

Figure 2 presents the spectra for calibrating alphas obtained under operating conditions.

The disk rotation was performed by means of an motor using the cyclotron magnetic field. In a number of experiments a motor with a coil "polarized" in the cyclotron magnetic field was used. Continuous rotation of the catcher was changed for a fast turn by 180° when a corresponding pulse of current was sent. Under the mentioned operating conditions the reaction products were collected in some part of the catcher for a certain period of time, then rapidly transferred to the spectrometer, the detection efficiency being some times higher than that for continuous rotation.

In order to measure the particle ranges, Al absorbers, fastened on a movable remote-controlled frame (8), were installed in front of the telescope input window. An α -source was mounted on the same frame. The beam collector (4) connected to a current measuring device permitted us to follow the beam intensity during the bombardment. An ion energy was measured with the help of a silicon detector (5), in which a part of the beam, after scattering in a gold foil, passed through a special collimator.

The device presented in Figure 1 was placed into a copper water-cooled jacket, the input window of which was an Al 8 μ -thick foil. To cool the target, the disk and the motor, the jacket was filled with helium at the pressure of 40 mm Hg.

II. Electronics

Electronics were used to permit us determining a decay type, to make a pulse amplitude analysis and to measure the half life for a given energy group.

Figure 3 shows an apparatus block-diagram. The pulses from the gaseous counter and the silicon detectors were amplified by means of some cascode preamplifiers, which had a bulb placed into the magnetic field in the nearest neighbourhood of the counter, each. The rest of the circuit was situated outside the magnetic field. The first bulb was the right construction triode with electrode geometry providing a normal bulb operation in a strong magnetic field.

After passing through the pre-amplifier the pulse from the gaseous counter was amplified additionally, then time-standardized ($1.6\ .10^{-6}$ sec.) and received by the discriminator input. Then the pulse, as an allowing one, was transferred from the integral discriminator output, via the lock-out circuit, to the linear gate. The gate input received the amplified and time-standardized (4.10^{-6} sec.) pulse from the silicon detectors. From the gate output the signal was sent to two amplitude analyzers, one of which was controlled by the pulse from the differential output of the proportional counter discriminator. At the same time two pulse spectra, were recorded from semiconducting counters. The first spectrum presented all the particles which left > 13 kev in the gaseous counter. The second spectrum included only the particles for which the gaseous counter pulse corresponded to an energy loss from 13 to 45 kev. This range refers to the protons of a 1-5-MeV energy. The calibrating 5.5-MeV alphas left about 200 kev in the gaseous counter. It was established that only 1.5% of the total alpha intensity was detected in the "proton" range of specific ionizations[x]. Thus, the first spectrum gave the whole picture of all heavy particle energies resulting from the radioactive decay, while the second spectrum was attributed mostly to protons. The comparison of the both spectra enabled us to select protons and to determine an alpha-emission intensity. The measurements were performed in the intervals between h.f. voltage modulation pulses on the dees (the lock-out circuit).

Figure 3 shows the part of the circuit meant for a time analysis. The time analyzer consisted of the generator of linearly growing voltage, a gate, and the amplitude analyzer AI-100. A linearly growing voltage was admitted to the closed gate which was then open about 4 μ sec. by the analyzed signal having passed through the differential discriminator. Thus, the pulse magnitude at the gate output was proportional to the time which had passed from the starting up of the "saw" up to the moment the pulse arrived from the detector. The starting moment coincided with a cyclotron switch off; when a h.f. voltage was applied, the circuit was blocked. The voltage modulation frequency on the dees was chosen to be such that the cyclotron "Silence" time was some times the half life under measurement.

Experimental Results

In investigating radioactive reaction products, the emission of heavy singly

---

[x] The entrance of alphas into the proton specific ionization range is associated with the gaseous counter pulse spectrum having a "tail" in the region of small amplitudes due to the effect of the magnetic field on electron collection.

charged particles was uniquely ascertained. Simultaneous measurements of the energy of these particles, their specific ionization and slowing in a substance have lead to the conclusion about them to be protons. Two groups of 5-MeV and 2.5-MeV protons were observed most distinct.

1. Proton Group at 5.0 MeV.

a) A nickel target 10 μ thick was bombarded with 140-MeV Ne^{20} ions. As a catcher, an aluminium 50 μ foil was used. Such a thickness is sufficient to absorb most of the long-range products of reactions. The disk had some apertures through which a certain part of the beam reached the current collector. The depletion layer of the silicon detectors was about 200 μ thick. In front of the telescope input window an Al 15 μ absorber was installed. In order to determine the background of the β and γ radiation, the experiments were carried out with an Al 200 μ thick absorber placed in front of the telescope. (In the experiments with the disk stopped, the background was also determined which would occur due to the presence of a residual ion beam in the cyclotron chamber in the intervals between voltage pulses on the cyclotron dees. This background was practically absent).

b) Fig.4 shows one of the spectra obtained. Though the spectrum was attributed to the pulses of the particles with > 13 kev ionization in the gaseous counter, the background of the β and γ radiation turned out to be rather large up to the 30th channel. This is due to the fact that the electrons move by spiral trajectories in the magnetic field and can lose a considerable amount of energy in the gaseous counter.

In the region of the 64th channel, the spectrum has its maximum distinctly seen, which belongs to the protons of an energy 5.0 ± 0.2 MeV [x].

The conclusion that these particles are protons is drawn from the following. The table I indicates that 92% of the particles of the mentioned group lose from 13 to 45 kev in the gaseous counter. An average energy loss for the protons with E = 5 MeV by estimation (taking into account the geometry factor) should be about 25 kev.

The most graphic results were obtained from the experiments in which the slowing of particles in a substance was determined. One of the spectra in Fig. 5 referred to the experiment with the gaseous counter alone between the semiconducting detectors and the disk (this being equivalent to Al 20 μ thick): Another spectrum was obtained for the case when a 30 μ absorber was placed in front

---

[x] In determining the proton energy the "driving in" of the emitter into the catcher and the proton energy loss before getting into the silicon detector were taken into account.

of the telescope input window. The peak replacement corresponds to the calculated slowing of 5-MeV protons. Note that Al 50 μ thick absorbs completely alphas with an energy of ≤ 8.4 MeV.

Fig. 6 presents one of the curves for the decay of the 5-MeV proton emitter. The half-life was found to be equal to (0.085 ± 0.015) sec. Apparently, in the spectrum there is a less intensive group of protons having an energy about 5.6 MeV. Then, attention was centered upon the group with an energy about 5 MeV.

A number of experiments was performed in order to identify this proton emitter. The natural way chosen was to try to determine the type of the isotope generation reaction. The reactions between complex nuclei are divided into two classes. In surface collisions of nuclei, the process of nucleon transfer takes place, and some products are generated close to the projectile by mass. Their ranges are equal to tens of microns in Al, and the yield depends relatively weakly upon the kind of a target. The other class includes the reactions accompanied by the formation of a compound nucleus. The range of such reaction products is a few microns.

Therefore, the range of the 5-MeV proton emitter was estimated and found considerably exceeding 9 μ Al: the replacement of the 50 μ catcher by the 9.3 μ aluminium disk lead to an effect 5 - 10 times less.

In the case of tantalum, copper and aluminium targets bombarded, the proton activity of an energy about 5 MeV was detected. Its yield was 2,3 and 5 times less, respectively, as compared to that for nickel. The cross-section for the investigated isotope production in the reaction Ni + Ne^{20} is some tenths of a microbarn for a neon energy about 120 MeV. One can be certain to state that this isotope is generated from Ne^{20} due to a nucleon transfer reaction. Its generation due to the bombardment of targets in a wide interval of atomic numbers and a long range of this nucleus speak well for this conclusion. These two facts are typical characteristics of transfer reaction products(19). The analysis of the properties of this reaction products leads to the most probable conclusion that protons with an energy about 5 MeV are emitted in the decay of one of neon or magnesium light isotopes (Ne^{17}, Mg$^{20-21}$).

2. Proton Energy Group at 2.5 MeV

a) A series of experiments was carried out to investigate the decay of short-range reaction products. In these experiments a Ni 2 μ target and an Al 9.3 μ thick disk were employed. The first experiments indicated that the radiation spectrum had no protons of an energy exceeding 3.5 MeV, therefore, the thickness of the depletion depth of detectors was decreased up to 80 μ . This decreased essentially the β and γ background.

Fig. 7. gives an pulse spectrum corresponding to the particles leaving 13-45 kev in the gaseous counter. This spectrum was obtained by summarizing the results of six independent measurements being accompanied by the background measurement, each. In Fig.7 one can see a distinct group with its peak in the 32 nd channel.

The results of the experiments on the specific ionization and slowing of these particles in Al indicate them to be protons. Really, it was determined that the energy loss of these particles in the gaseous counter is 25-60 kev., what coincides with the calculated value for 2.5-3- MeV protons. The data in Table 1 agree with this, and it follows that 70% of this group particles leave 13-45 kev in the gaseous counter.

Fig. 8 illustrates the experiments on the determination of the slowing of the particles under investigation. Here you can see the energy spectra of these particles having passed through a material equivalent to Al 13 μ and 28 μ thick. In progressing from one absorber to another the peak is replaced according to that expected for protons.

The spectrum maximum (Fig.7) refers to (2.5 ± 0.2) MeV. (the error is mainly due to an inaccuracy in taking into account the proton slowing before entering the telescope). The spectrum presents also some more energetic protons (up to 3.3 MeV). To the left of the maximum there is another proton group, but this part of the spectrum has not been investigated yet owing to a high background.

With the help of a time-amplitude converter, a half-life for the proton group with its maximum at 2.5 MeV has been measured. One of the decay curves is shown in Fig. 9, the emitter half-life being equal to (23 ± 4) sec.

b) A number of experiments was performed, in order to identify the obtained isotope.

To estimate the range of the nuclei, a Ni 2 μ thick target has been bombarded with 105 - MeV Ne^{20} ions: an Al 9.3 μ absorber was placed between the target and the rotating disk. Mounting such an absorber has practically taken off the effect: the intensity of the group in question has become no less than 20 times lower. This means that the range of 2.5 MeV proton emitters is shorter than 9 μ Al.

Further, Ni and Fe^{54} (a separated isotope target, 1.6 mg/cm^2 on an Al 6 μ backing) were bombarded with different ions. In the case of Ni bombarded with 70-100-MeV O^{16} ions, a proton group was also observed with its maximum at 2.5 MeV. The decay curve of this activity is given in Fig. 10. Within the errors the half life coincides with a value (23 ± 4) sec. obtained from the analysis of the curve in Fig.9. This gives the basis for thinking that the same proton emitter is generated following the reactions Ni + Ne^{20} and Ni + O^{16}.

The proton activity of 2.5 MeV has not been detected in the bombardment of Ni 2 μ thick with 65- MeV B^{11} ions and of Fe^{54} with O^{16} ions. Table II demonstrated the relative yield of the proton group under investigation in different reactions. The absolute cross section for the proton emitter generation from the reaction Ni + Ne^{20} is of the order of a microbarn, which does not depend very much on the energy in the region of 100-140 MeV[15].

Table II

Reaction	Ni + Ne^{20}	Ni + O^{16}	Ni + B^{11}	Fe^{54} + O^{16}
Relative yield of the emitter with $E = 2.5$ MeV and $T_{1/2} = 23$sec.	100	30	< 3	< 1

A short range of the proton emitter indicates that its mass number is equal to some tens. This conclusion is independent of the assumptions concerning the reaction mechanism[20]. The production of this proton-rich isotope may result from the decay of an excited compound nucleus generated from the fusion of a target nucleus and a projectile. While bombarding Ni with Ne^{20} and O^{16} ions, we observed the effect which could not be displayed in the reaction Fe^{54} + O^{16}. This result can be explained under the assumption that the atomic number of the 23-sec. proton emitter is 35-36 (Br, Kr) and its mass 70-72. The excitation function for the nucleus formation in the reaction Ni + Ne^{20} is consistent with this assumption. The question can arise whether this proton emitter is not produced from Ni owing to transfer reactions. This kind of supposition is possible, though it seems less probable. Indeed, in this case one should expect the effect detection in the bombardment of Ni with boron and of Fe^{54} with oxygen.

Discussion of Results

1. Table III shows the main characteristics of the proton emitters observed[x]. The Coulomb barriers (V_p) for protons are listed here as well.

---

[x] The table is not including the proton emitter with $T_{1/2} = 0.5 - 1$ sec. observed in our work[14]. It is produced from Ne^{20} due to transfer reactions. The present paper does not study this emitter, which makes, apparently, a contribution to the region $E_p < 4.5$ MeV.

Table III

Isotope	$(Br, Kr)^{70-72}$	Ne^{17}, Mg^{20-21}
E_p MeV	2,5 ± 0.2	5.0 ± 0.2
$T_{1/2}$ sec.	23 ± 4	0.085 ± 0.015
V_p MeV	8.5	4
τ_p / τ_o	$> 10^4$	≈ 1

The last line of the table includes the τ_p - calculated lifetime of the nucleus emitting a proton with a certain energy (with relation to the "nuclear time"). In the calculations the Coulomb barrier alone was taken into account, therefore, the values listed in the table should be considered as lower ones. If the angular momentum removed by the proton ℓ is not a zero, τ_p will be more. This value will grow tens of times for $\ell = 2$ already.

It is clear that a proton emission delay cannot be due to the Coulomb barrier. It is most probable to be associated with positron decay. The nuclear reaction results in the formation of an isotope undergoing positron decay at a high energy. The daughter nucleus being not very stable against proton emission, some excitation is sufficient after β^+ - transition for the nucleus to emit a proton. In the case of the first (Br, Kr) isotope decay the proton goes abroad the nucleus through the tunnel mechanism at a 0,3 level from the Coulomb barrier, the decay picture being analogous to the process of the long-range alpha emission by heavy nuclei. The protons with an energy about 5 MeV pass above the barrier; this being completely analogous to "delayed" neutrons.

The described type of proton decay should be very wide-spread phenomenon near the nuclei proton instability boundary ($B_p = 0$) and in the first place for even elements. It is natural that for this kind of decay to exist, a positron transition energy should exceed a proton binding one.

Furthermore, E^*, the excitation energy of the nucleus after β^+ - decay should be such at which the competition on behalf of the radiation transition is not overwhelming. As a matter of fact this condition is for the emitted proton energy $E_p = E^* - B_p$. According to our estimates the competition on behalf of the γ - radiation will be not essential at $E_p > E_{p_0}$, E_{p_0} varying in the range of 0.7 to 2 MeV with Z varying from 20 to 50. Thus $E_{\beta^+} - (E_{p_0} + B_p) > 0$ is necessary for proton emission to appear after β^+ - decay. The probability for the process seems to increase with the growth of this difference. Some evaluations of this probability for a statistical model are listed in reference [10]. The condition put in Goldansky's work[9] is quite unnecessary. In his paper it is considered necessary to have the superallowed (without any change in the isotopic spin) β^+ - transition to the proton-unstable level i.e., the following relation should be satisfied:

$$\left[\left({}_{Z}D_{N}^{A} - {}_{Z-2}D_{N+1}^{A-1}\right) - \left(1.2\,\frac{Z}{A^{1/3}} + 6.8\right)\right] \text{ MeV} > 0$$

where D is a mass defect. It is worth stressing that proton emission can be observed also in the case when the indicated difference is less than a zero. It is important to have an energetic potentiality for this process and inconsiderable competition on behalf of the γ transition ($E_{\beta^+} - (E_{p_0} + B_p) > 0$). Proton decay can occur after the usual β^+ - transition, and even if this transition is competed with a superallowed one which is not followed by proton emission. In the last case the success in delayed proton detection will be conditioned by the isotops production cross section and the apparatus sensitivity. It should be mentioned that in no one of the cases observed with "delayed" proton emission a superallowed β^+ - transition to a proton-unstable level was displayed.

2. Another mechanism is possible for p - decay with a large lifetime, i.e., an isomeric one. The heavy-ion-induced reactions are known to result, with high probability, in configuration isomers. These nuclei are in high-spin state due to the excitation of some nucleons. For a proton-rich nucleus, such a state can appear to be proton-unstable provided $E^* > B_p$.

A high spin will lead to the suppression of the radiation transition, the nucleus will decay emitting the proton of an energy $E_p = E^* - B_p$. On the other hand, the joint effect of the Coulomb and the centrifugal barrier will stipulate a long lifetime for the proton decay. In the region of the heavy nuclei alpha-active configuration isomers with a hindrance factor up to 10^{14} were detected[21-23]. In[24-25] the appearance of high-spin isomeric states is explained by the effect of the residual $n-p$ interaction. Report[25] indicates that the formation of configuration isomers is possible in the region of nuclei of a mean atomic weight.

The probability for isomer proton decay can be approximately put down as follows $W_\ell = \delta P_\ell$; P_ℓ is a barrier quantum mechanical penetration for a proton with the momentum ℓ ; δ is a reduced probability for the process, which depends on the state structure. Fig. 11 presents the results of the p - decay forbidding parameter owing to the angular momentum (the formula from paper[26] is used) for nuclei with $Z = 30$ and 50. The forbiddenness due to the structure factor δ requires some detailed calculations. For α - active isomers, this forbidding component reaches the value 10^6.

It is not excluded that the detected proton emitter having a half life about 23 sec. is the proton-active isomer with a (8-10) $\hbar$ spin.

The investigations of radioactive nuclei p -decay are currently in progress at our laboratory. The goals of these studies are to determine experimentally the mechanism of the proton decay detected and to identify the obtained isotopes with higher precision.

The authors are very thankful to E.Z.Ryndina and the staff for manufacturing silicon detectors which were of great importance for the work carried out. The authors would also like to express their gratitude to V.Titov and V.Chugreyev, for design works, and to E.A.Minin, N.Danilov and B.Bibichev, for their assistance in preparing the experiments, and to the cyclotron group guided by Dr. A.N.Filipson, for providing the bombardments.

Table I

Particles	N_1 $\Delta E > 13$ kev	N_2 13 kev $< \Delta E < 45$ kev	N_2/N_1
Protons $E_p = 2.5$ MeV	302	279	0.92
Protons $E_p = 5.0$ MeV	1343	914	0.69
α -particles $E_\alpha = 5,5$ MeV	2648	40	0.015

The table gives the intensities of two proton groups under different conditions for the value of a pulse from the gaseous counter ΔE . The results are obtained from the bombardment of Ni with Ne ions. The lowest line corresponds to the calibrating α -particles.

References

1. Alvarez L., Phys. Rev., 75, 1815 (1949).
2. L.Alvarez. Phys. Rev., 80, 518 (1950).
3. S.Breckon, A.Henrikson. Can. J. Phys., 32, 223 (1954).
4. A.Birge. Phys. Rev., 85, 753 (1952).
5. B.S.Dzhelepov. Izv. AN SSSR, Seria Phys., 15, 498 (1956).
6. V.A.Karnaukhov. "Proceedings of the Conference on Reactions Induced by Multiply Charged Ions", 1958, Dubna, p.71, (1959).
7. V.A.Karnaukhov, N.I.Tarantin. JETP, 39, 1106 (1960).
8. V.I.Goldansky. JETP, 39, 497(1960).
9. V.I.Goldansky. DAN , 146, No, 6, 1309 (1962).

10. N.A.Vlasov. Atomnaya Energia, 14, 45 (1963).
11. Ya.B.Zel"dovich. JETP, 38, 1123 (1960).
12 V.I.Goldansky. Nucl. Phys., 27, 648 (1961).
13. V.A.Karnaukhov, G.M.Ter-Akopyan, V.G.Subbotin. JINR Preprint, P-1072. Dubna, 1962.
14. V.A.Karnaukhov, G.M.Ter-Akopyan, V.G.Subbotin, "Search for proton emitters among the products of heavy-ion-induced reactions", Proceedings of the 3rd Conference on Reactions Between Complex Nuclei, April 1963, Pacific Grove, USA. p.434.
15. V.A.Karnaukhov, G.M.Ter-Akopyan, L.A.Petrov, V.G.Subbotin. JETP, 45, 1280 (1963).
16. R.Barton, R.McPherson, R.Bell, W.Frisken, W.Link, R.Moore. Can. J. Phys., 41, 2007 (1963).
16a. R.Barton, R.McPherson, R.Bell. Can. Nucl. Technology, v.2, No.4, p.40, Fall 1963.
17. J.Preiss. Private Communication, August 1963.
18. Fink, Friedmann, Braid. Private communication, 1963.
19. R.Kaufmann, R.Wolfgang. Phys. Rev., 121, 192 (1961).
20. Y.V.Rid, I.M.Landenbauer-Bellis, R.Wolfgang. Phys. Rev. 127, 1722 (1962).
21. Jentschke, Juveland Kinsey: Phys. Rev., 96, 231 (1964).
22. V.A.Karnaukhov. JETP, 42, 973 (1962).
23. I.Perlman, F.Asaro, A.Chiorso, A.Larsh, R.Latimer. Phys. Rev., 127, 917 (1962).
24. L.A.Sliv. Ju.I.Kharitonov. JETP, 44, 247 (1963).
25. L.A.Sliv, Ju.I.Kharitonov. "High nuclear isomeric states", report at the XIVth Meeting on nuclear spectroscopy, Tbilisi, 1963.
26. H.A.Bethe. Physics of Nucleus, v.II, GITTL, Moscow, 1948.

Received by Publishing Department
on March 23, 1964.

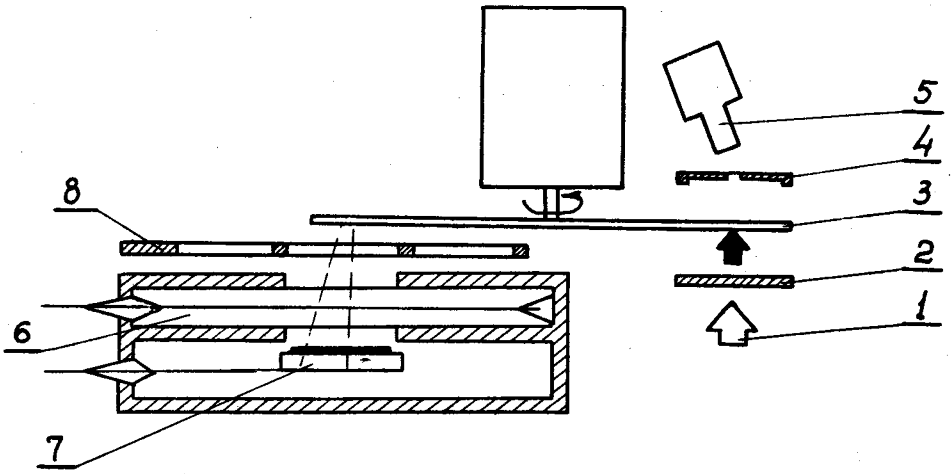

Fig.1. The diagram of the experimental apparatus.

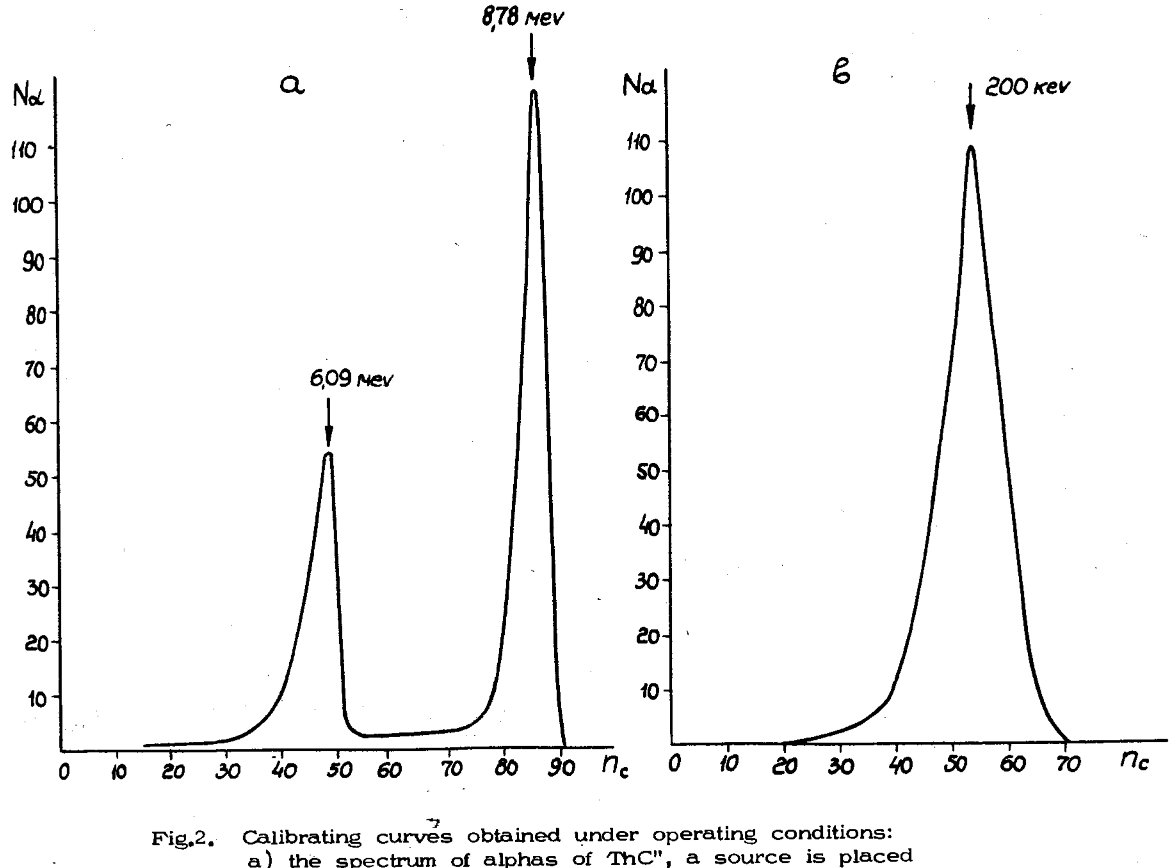

Fig.2. Calibrating curves obtained under operating conditions:
a) the spectrum of alphas of ThC", a source is placed on the disk. The amount of the substance between the source and the silicon detectors is equivalent to Al 13μ thick.
b) the gaseous counter pulse spectrum for 5,5 - MeV alpha-source placed at a distance of 3 cm from the input window.

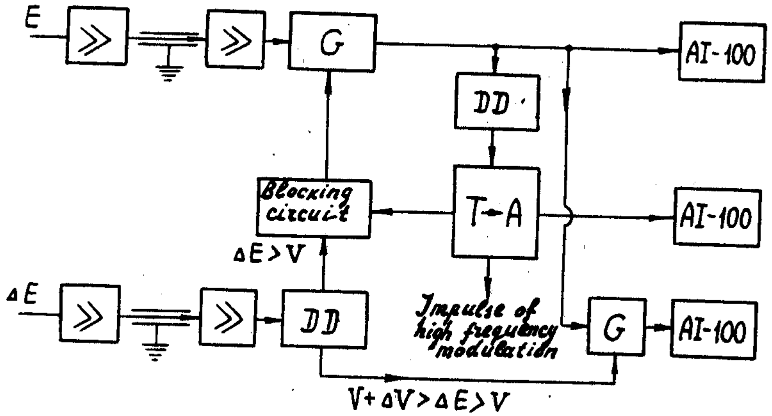

Fig.3. The electronics blokc-diagram.

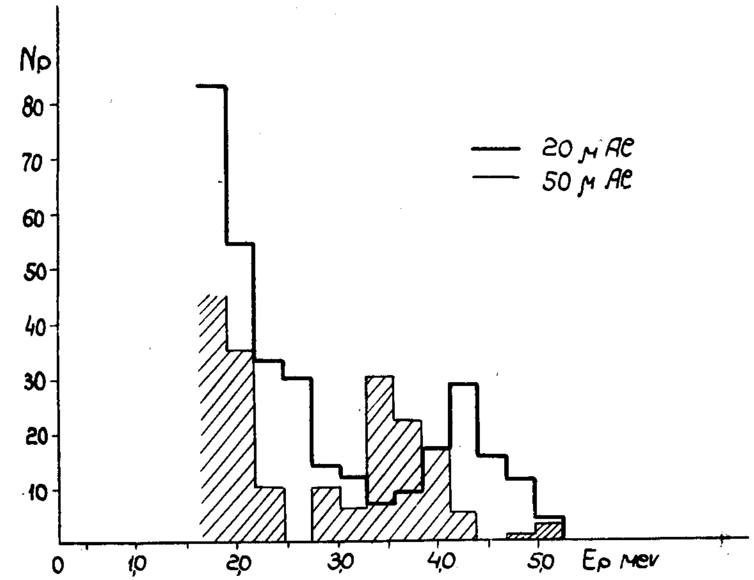

Fig.5. The spectrum of the 5.0 - MeV proton group obtained in experiments with different absorbers between the disk and the detectors (20 μ and 50 μ thick Al). The thickness of the absorbers is equal to 23 μ and 58μ Al, with an average angle of proton entrance into the telescope (30°) taken into account.

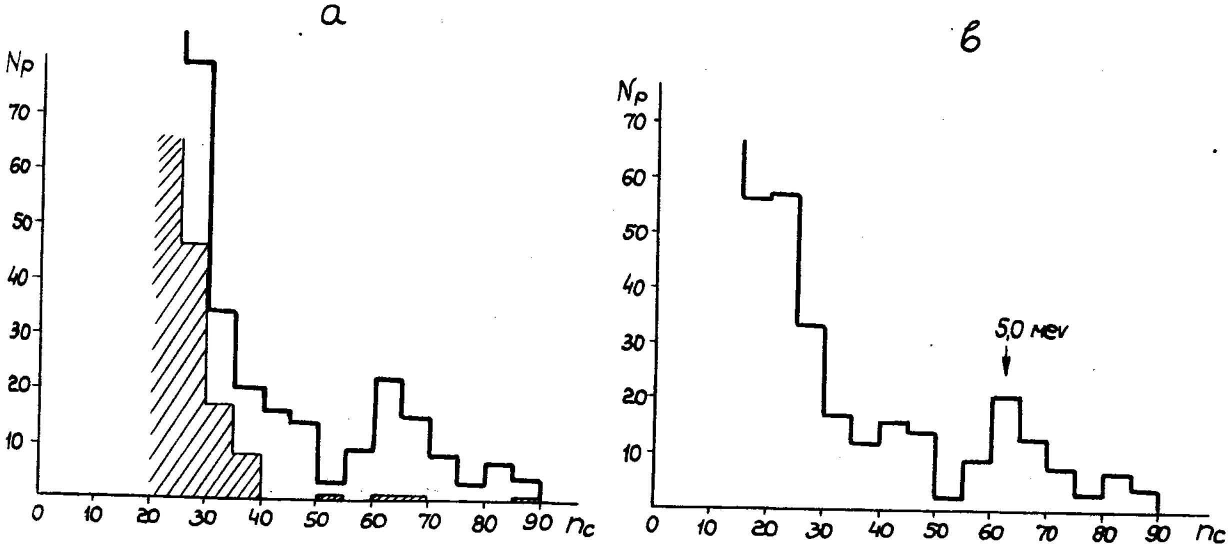

Fig.4.a) The proton energy spectrum obtained from the bombardment of Ni with Ne^{20} ions. The β and γ - background spectrum is shaded. (The disk is Al 50 μ thick, the depletion deph of the silicon detectors is about 200 μ).

b) The same spectrum with the β and γ - background subtracted. In the determination of the 5 - MeV proton group energy the absorption in the substance between the disk and the silicon detectors as well as the absorption in the very disk (due to the "driving in" of nuclei) are taken into account.

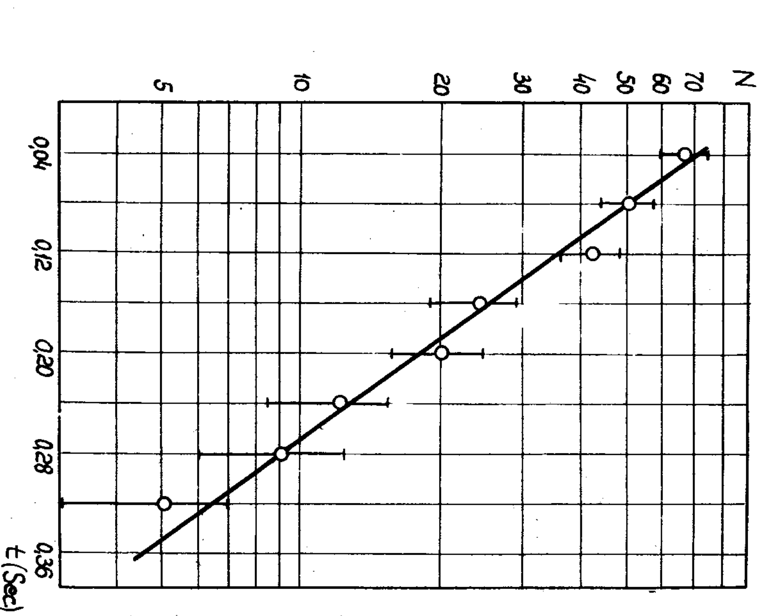

Fig. 6. The decay curve of the 5.0-MeV proton emitter.

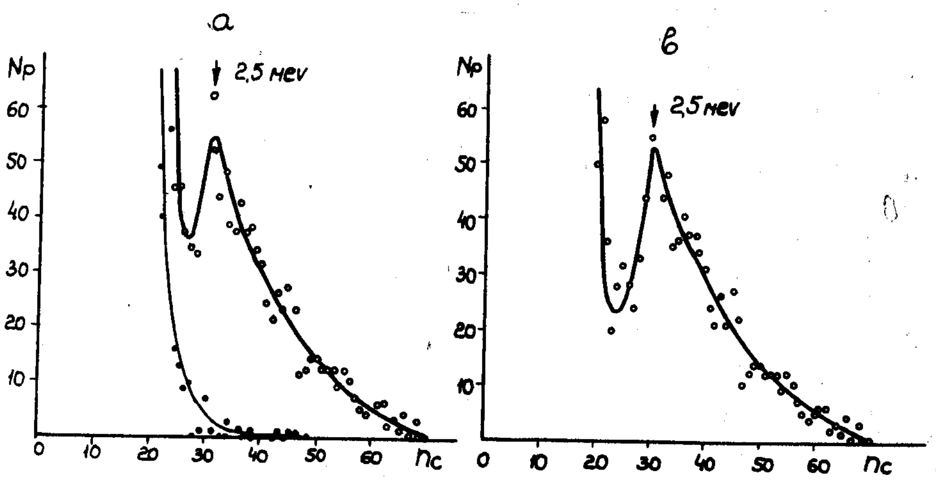

Fig.7. a) The proton enegry spectrum in the beombardment of Ni with Ne^{20} ions. The β and γ -background spectrum is indicated by block dots (The disk is 9.3 μ thick Al, the depletion depth of the silicon detectors is about 80 μ).

b) The same spectrum with the β and γ -background subtracted. The energy of the 2.5 MeV proton group is determined with the absorption taken into account.

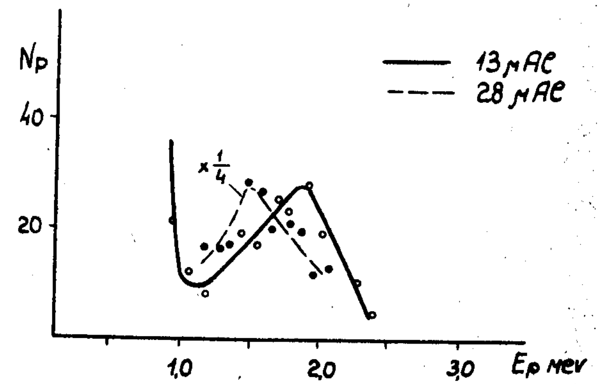

Fig. 8. The spectra of the 2.5 MeV proton group. The thickness of the absorber between the disk and the silicon detector is equivalent to 13 μ and 28 μ thick Al. With an average angle of proton entrance into the telescope(30°), the thickness of the absorbers is 15 μ and 32.5 μ Al.

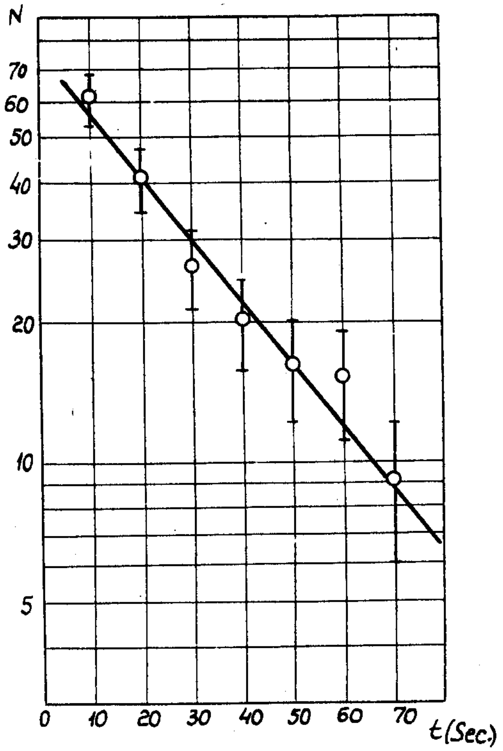

Fig. 9. The decay curve of the 2.5 MeV proton emitter, the reaction is Ni + Ne^{20}.

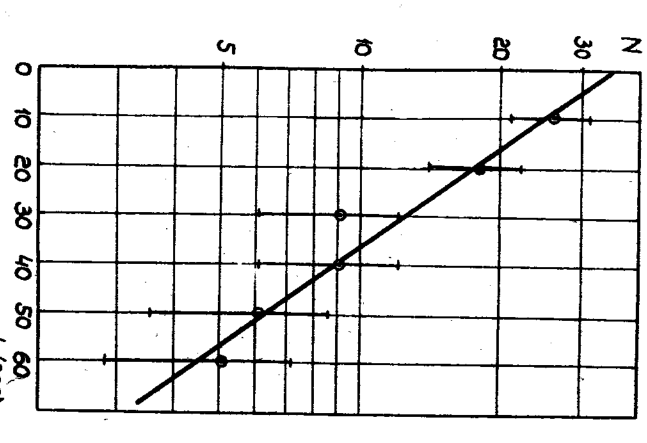

Fig. 10. The decay curve of the 2.5 - MeV proton emitter, the reaction is Ni + O^{16}.

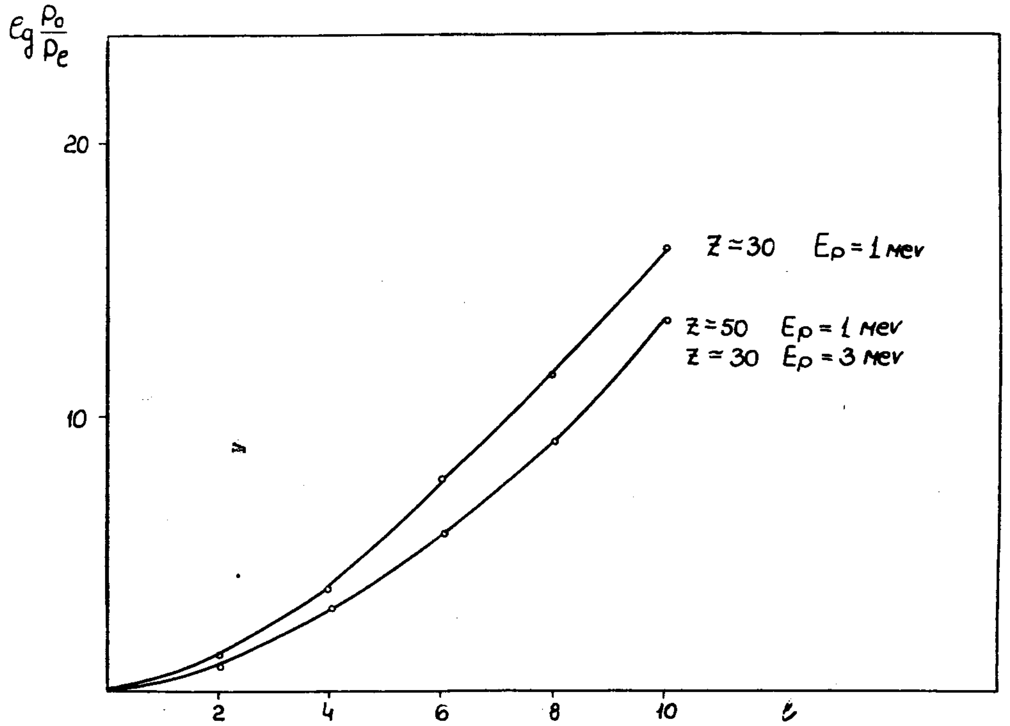

Fig. 11. The figure illustrating the centrifugal barrier effect upon the proton emission probability. P_0 / P_ℓ is a ratio of the barrier penetrations for protons with the momenta equal to 0 and ℓ .